SECTION II
SPECIFICATIONS

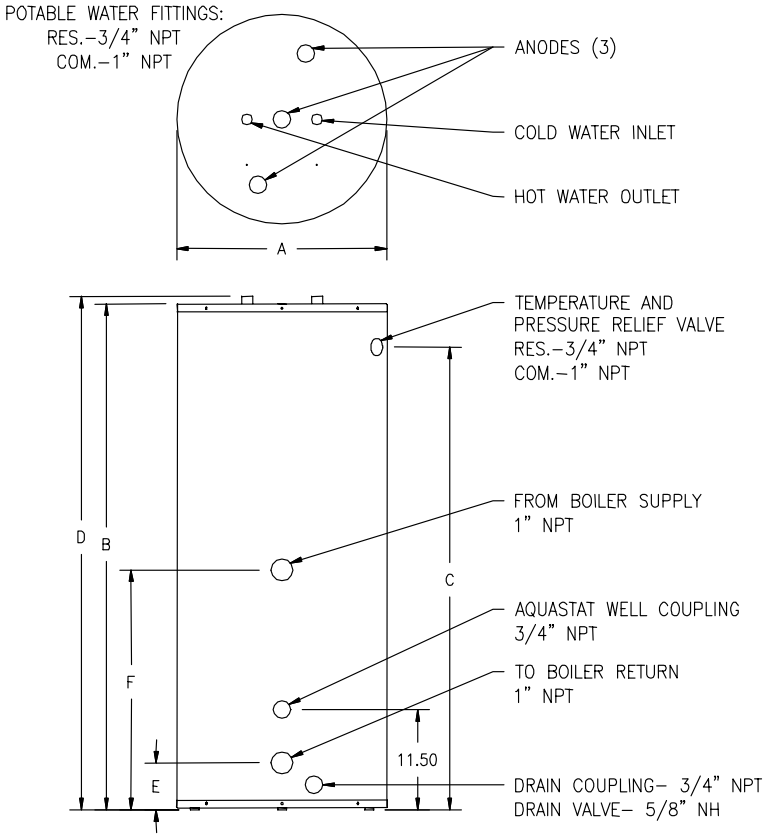

Figure 1 – Tank Layout

Table 1: Water Heater Dimension (Inches)

MODEL	A	B	C	D	E	F
40-Gal. / Res.	24	36	29-3/4	36-3/4	5-3/8	27-1/2
50-Gal. / Res.	26	36	29-3/4	36-3/4	5-3/8	27-1/2
65-Gal. / Res.	22	59-1/4	53-1/8	60	5-3/8	27-1/2
80-Gal. / Res.	24	59	52-7/8	59-3/4	5-3/8	27-1/2
120-Gal. / Com.	28-1/4	62-1/2	55-3/4	63-1/4	6-3/8	48-3/4