RAPTOR FIRETUBE

High Efficiency Gas-Fired Hot Water Direct Vent Condensing Boilers

INSTALLATION AND OPERATING INSTRUCTIONS

These instructions must be affixed on or adjacent to the boiler and retained for future reference.

As an ENERGY STAR® Partner, Velocity Boiler Works has determined that the RAPTOR Series meets the ENERGY STAR® guidelines for energy efficiency established by the United States Environmental Protection Agency (EPA).

WARNING

Improper installation, adjustment, alteration, service or maintenance can cause property damage, injury, or loss of life. For assistance or additional information, consult a qualified installer, service agency or the gas supplier. This boiler requires a special venting system. Read these instructions carefully before installing.

Intertek 9700609

Quality Value & Service

Velocity Boiler Works, LLC
P.O. Box 14818
3633 I Street
Philadelphia, PA 19134

107363-01 8/17

IMPORTANT INFORMATION - READ CAREFULLY

NOTE: The equipment shall be installed in accordance with those installation regulations enforced in the area where the installation is to be made. These regulations shall be carefully followed in all cases. Authorities having jurisdiction shall be consulted before installations are made.

All wiring on boilers installed in the USA shall be made in accordance with the National Electrical Code and/or local regulations.

All wiring on boilers installed in Canada shall be made in accordance with the Canadian Electrical Code and/or local regulations.

The City of New York requires a Licensed Master Plumber supervise the installation of this product.

The Massachusetts Board of Plumbers and Gas Fitters has approved the RAPTOR™ B Series boiler. See the Massachusetts Board of Plumbers and Gas Fitters website, http://license.reg.state.ma.us/pubLic/pl_products/pb_pre_form.asp for the latest Approval Code or ask your local Sales Representative.

The Commonwealth of Massachusetts requires this product to be installed by a Licensed Plumber or Gas Fitter.

The following terms are used throughout this manual to bring attention to the presence of hazards of various risk levels, or to important information concerning product life.

DANGER

Indicates an imminently hazardous situation which, if not avoided, will result in death, serious injury or substantial property damage.

CAUTION

Indicates a potentially hazardous situation which, if not avoided, may result in moderate or minor injury or property damage.

WARNING

Indicates a potentially hazardous situation which, if not avoided, could result in death, serious injury or substantial property damage.

NOTICE

Indicates special instructions on installation, operation, or maintenance which are important but not related to personal injury hazards.

DANGER

Explosion Hazard. DO NOT store or use gasoline or other flammable vapors or liquids in the vicinity of this or any other appliance.

If you smell gas vapors, DO NOT try to operate any appliance - DO NOT touch any electrical switch or use any phone in the building. Immediately, call the gas supplier from a remotely located phone. Follow the gas supplier's instructions or if the supplier is unavailable, contact the fire department.

WARNING

This boiler must only be serviced and repaired by skilled and experienced service technicians.

If any controls are replaced, they must be replaced with identical models.

Read, understand and follow all the instructions and warnings contained in all the sections of this manual.

If any electrical wires are disconnected during service, clearly label the wires and assure that the wires are reconnected properly.

Never jump out or bypass any safety or operating control or component of this boiler.

Assure that all safety and operating controls and components are operating properly before placing the boiler back in service.

Annually inspect all vent gaskets and replace any exhibiting damage or deterioration.

WARNING

Asphyxiation Hazard. Fire Hazard. Explosion Hazard. This boiler requires regular maintenance and service to operate safely. Follow the instructions contained in this manual.

Improper installation, adjustment, alteration, service or maintenance can cause property damage, personal injury or loss of life. Read and understand the entire manual before attempting installation, start-up operation, or service. Installation and service must be performed only by an experienced, skilled, and knowledgeable installer or service agency.

This boiler must be properly vented.

This boiler needs fresh air for safe operation and must be installed so there are provisions for adequate combustion and ventilation air.

Asphyxiation Hazard. The interior of the venting system must be inspected and cleaned before the start of the heating season and should be inspected periodically throughout the heating season for any obstructions. A clean and unobstructed venting system is necessary to allow noxious fumes that could cause injury or loss of life to vent safely and will contribute toward maintaining the boiler's efficiency.

Installation is not complete unless a safety relief valve is installed in the supply piping. - See the System Piping Section of this manual for details.

This boiler is supplied with safety devices which may cause the boiler to shut down and not re-start without service. If damage due to frozen pipes is a possibility, the heating system should not be left unattended in cold weather; or appropriate safeguards and alarms should be installed on the heating system to prevent damage if the boiler is inoperative.

Burn Hazard. This boiler contains very hot water under high pressure. Do not unscrew any pipe fittings nor attempt to disconnect any components of this boiler without positively assuring the water is cool and has no pressure. Always wear protective clothing and equipment when installing, starting up or servicing this boiler to prevent scald injuries. Do not rely on the pressure and temperature gauges to determine the temperature and pressure of the boiler. This boiler contains components which become very hot when the boiler is operating. Do not touch any components unless they are cool.

Respiratory Hazard. Boiler materials of construction, products of combustion and the fuel contain alumina, silica, heavy metals, carbon monoxide, nitrogen oxides, aldehydes and/or other toxic or harmful substances which can cause death or serious injury and which are known to the state of California to cause cancer, birth defects and other reproductive harm. Always use proper safety clothing, respirators and equipment when servicing or working nearby the appliance.

Failure to follow all instructions in the proper order can cause personal injury or death. Read all instructions, including all those contained in component manufacturers manuals which are provided with the boiler before installing, starting up, operating, maintaining or servicing.

All cover plates, enclosures and guards must be in place at all times.

DANGER

Explosion Hazard. Electrical Shock Hazard. Burn Hazard. This boiler uses flammable gas, high voltage electricity, moving parts, and very hot water under high pressure. Assure that all gas and electric power supplies are off and that the water temperature is cool before attempting any disassembly or service.

Do not attempt any service work if gas is present in the air in the vicinity of the boiler. Never modify, remove or tamper with any control device.

Special Installation Requirements for Massachusetts

A. For all sidewall horizontally vented gas fueled equipment installed in every dwelling, building or structure used in whole or in part for residential purposes and where the sidewall exhaust vent termination is less than seven (7) ft. above grade, the following requirements shall be satisfied:

1. If there is no carbon monoxide detector with an alarm already installed in compliance with the most current edition of NFPA 720, NFPA 70 and the Massachusetts State Building Code in the residential unit served by the sidewall horizontally vented gas fueled equipment, a battery operated carbon monoxide detector with an alarm shall be installed in compliance with the most current edition of NFPA 720, NFPA 70 and the Massachusetts State Building Code.
2. In addition to the above requirements, if there is not one already present, a carbon monoxide detector with an alarm and a battery back-up shall be installed and located in accordance with the installation requirements supplied with the detector on the floor level where the gas equipment is installed. The carbon monoxide detector with an alarm shall comply with 527 CMR, ANSI/UL 2034 Standards or CSA 6.19 and the most current edition of NFPA 720. In the event that the requirements of this subdivision can not be met at the time of the completion of the installation of the equipment, the installer shall have a period of thirty (30) days to comply with this requirement; provided, however, that during said thirty (30) day period, a battery operated carbon monoxide detector with an alarm shall be installed in compliance with the most current edition of NFPA 720, NFPA 70 and the Massachusetts State Building Code. In the event that the sidewall horizontally vented gas fueled equipment is installed in a crawl space or an attic, the carbon monoxide detector may be installed on the next adjacent habitable floor level. Such detector may be a battery operated carbon monoxide detector with an alarm and shall be installed in compliance with the most current edition of NFPA 720, NFPA 70 and the Massachusetts State Building Code.
3. A metal or plastic identification plate shall be permanently mounted to the exterior of the building at a minimum height of eight (8) ft. above grade directly in line with the exhaust vent terminal for the horizontally vented gas fueled heating appliance or equipment. The sign shall read, in print size no less than one-half (1/2) inch in size, **"GAS VENT DIRECTLY BELOW. KEEP CLEAR OF ALL OBSTRUCTIONS"**.
4. A final inspection by the state or local gas inspector of the sidewall horizontally vented equipment shall not be performed until proof is provided that the state or local electrical inspector having jurisdiction has granted a permit for installation of carbon monoxide detectors and alarms as required above.

B. EXEMPTIONS: The following equipment is exempt from 248 CMR 5.08(2)(a) 1 through 4:

1. The equipment listed in Chapter 10 entitled "Equipment Not Required To Be Vented" in the most current edition of NFPA 54 as adopted by the Board; and
2. Product Approved sidewall horizontally vented gas fueled equipment installed in a room or structure separate from the dwelling, building or structure used in whole or in part for residential purposes.

C. When the manufacturer of Product Approved sidewall horizontally vented gas equipment provides a venting system design or venting system components with the equipment, the instructions for installation of the equipment and the venting system shall include:

1. A complete parts list for the venting system design or venting system; and
2. Detailed instructions for the installation of the venting system design or the venting system components.

D. When the manufacturer of a Product Approved sidewall horizontally vented gas fueled equipment does not provide the parts for venting flue gases, but identifies "special venting systems", the following shall be satisfied:

1. The referenced "special venting system" instructions shall be included with the appliance or equipment installation instructions; and
2. The "special venting systems" shall be Product Approved by the Board, and the instructions for that system shall include a parts list and detailed installation instructions.

E. A copy of all installation instructions for all Product Approved sidewall horizontally vented gas fueled equipment, all venting instructions, all parts lists for venting instructions, and/or all venting design instructions shall remain with the appliance or equipment at the completion of the installation.

WARNINGS FOR THE HOMEOWNER

FOLLOW ALL INSTRUCTIONS and warnings printed in this manual and posted on the boiler.

MAINTAIN THE BOILER. To keep your boiler safe and efficient, have a service technician maintain this boiler as specified in Service and Maintenance Instructions.

IF YOU ARE NOT QUALIFIED to install or service boilers, do not install or service this one.

THE BOILER MAY LEAK WATER at the end of its useful life. Be sure to protect walls, carpets, and valuables from water that could leak from the boiler.

PROTECT YOUR HOME IN FREEZING WEATHER. A power outage, safety lockout, or component failure will prevent your boiler from lighting. In winter, your pipes may freeze and cause extensive property damage. Do not leave the heating system unattended during cold weather unless alarms or other safeguards are in place to prevent such damage.

DO NOT BLOCK AIR FLOW into or around the boiler. Insufficient air may cause the boiler to produce carbon monoxide or start a fire.

KEEP FLAMMABLE LIQUIDS AWAY from the boiler, including paint, solvents, and gasoline. The boiler may ignite the vapors from the liquids causing explosion or fire.

KEEP CHILDREN AND PETS away from hot surfaces of the boiler, boiler piping, vent piping and vent terminals.

CARBON MONOXIDE (CO) is an odorless, deadly gas that may be introduced into your home by any malfunctioning fuel-burning product or vent system failure. Consider installing CO alarms near bedrooms in all levels of the building to warn you and your family of potential CO exposure.

WARNINGS FOR THE INSTALLER

READ THIS ENTIRE MANUAL before attempting installation, start-up, or service. Improper installation, adjustment, alteration, service, or maintenance may cause serious property damage, personal injury, or death.

DO NOT DISCONNECT PIPE FITTINGS on the boiler or in the heating system without first verifying that the system is cool and free of pressure and that your clothing will protect you from a release of hot water or steam. Do not rely solely on the boiler's temperature and pressure gage when making this judgment.

USE PROPER PERSONAL PROTECTION EQUIPMENT when servicing or working near the boiler. Materials of construction, flue products, and fuel contain alumina, silica, heavy metals, carbon monoxide, nitrogen oxides, and/or other toxic or harmful substances that can are hazardous to health and life and that are known to the State of California to cause cancer, birth defects, and other reproductive harm.

INSTALL ALL GUARDS, cover plates, and enclosures before operating the boiler.

SIZE THE BOILER PROPERLY relative to the design heat load or, if using domestic hot water priority, the peak hot water load, whichever is larger. A grossly oversized boiler will cycle excessively and this will lead to premature failure of the boiler and its components. Our warranty does not apply to damage from excessive cycling.

ADHERE TO ALL LOCAL CODE REQUIREMENTS. Contact your local code inspector prior to installation. In the absence of a local code, adhere to the *National Fuel Gas Code* ANSI Z223.1/NFPA 54 or CAN/CSA B149.1, *Natural Gas and Propane Installation Code.*

ALL WIRING must comply with the *National Electrical Code* ANSI/NFPA 70 (in the USA) or the *Canadian Electrical Code* CSA C22.1 (in Canada) and any local regulations.

Table of Contents

I.	Product Description		7
II.	Specifications		7
III.	Before Installing		9
IV.	Locating The Boiler		10
V.	Mounting The Boiler		12
VI.	Air For Ventilation		15
VII.	Venting		16
	A. Vent System Design		16
	B. Design Requirements Unique to Horizontal Twin Pipe Venting Systems		22
	C. Design Requirements Unique to Vertical Venting Systems		28
	D. Design Requirements Unique to Split Vent Systems		36
	E. Assembly of CPVC/PVC Vent Systems		45
	F. Assembly of DuraVent PolyPro Vent Systems		52
	G. Assembly of Selkirk Polyflue Vent Systems		57
	H. Assembly of Centrotherm InnoFlue Vent Systems		61
	I. Assembly of Stainless Steel Vent Systems		65
	J. Condensate Trap and Drain		67
	K. Removing An Existing Boiler From Common Chimney		69
VIII.	Gas Piping		70
IX.	System Piping		72
	A. General System Piping Precaution		72
	B. Standard Piping Installation Requirements		73
	C. Near Boiler Piping Design		75
	D. Piping For Special Situations		88
X.	Wiring		89
XI.	Start-Up and Checkout		99
XII.	Operation		106
XIII.	Service and Maintenance		136
XIV.	Troubleshooting		143
XV.	Service Parts		149
	Appendix A:	Instructions for High Altitude Installation Above 2,000 ft.	161
	Appendix B:	RPTR155CB Combi Instruction Manual	166
	Appendix C:	Special Requirements For Side-Wall Vented Appliances In The Commonwealth of Massachusetts	177

I. Product Description

This boiler is a stainless steel gas fired condensing boiler designed for use in forced hot water heating systems requiring supply water temperatures of 180°F or less. It is designed for installation on a wall. This boiler may be vented vertically or horizontally with combustion air supplied from outdoors. It is not designed for use in gravity hot water systems or systems containing significant amounts of dissolved oxygen.

Models RPTR085HB through RPTR270HB provide central space heating and/or indirect domestic hot water (DHW) heating.
Model RPTR155CB provides economical tankless domestic hot water (DHW) heating in addition to central space heating.

II. Specifications

Dimensions			
	085-155	155 Combi	205-270
'A'	20"	23"	21"

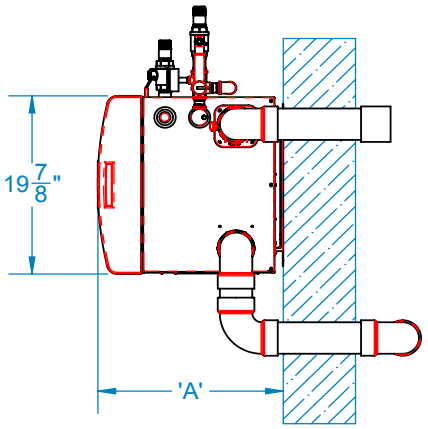

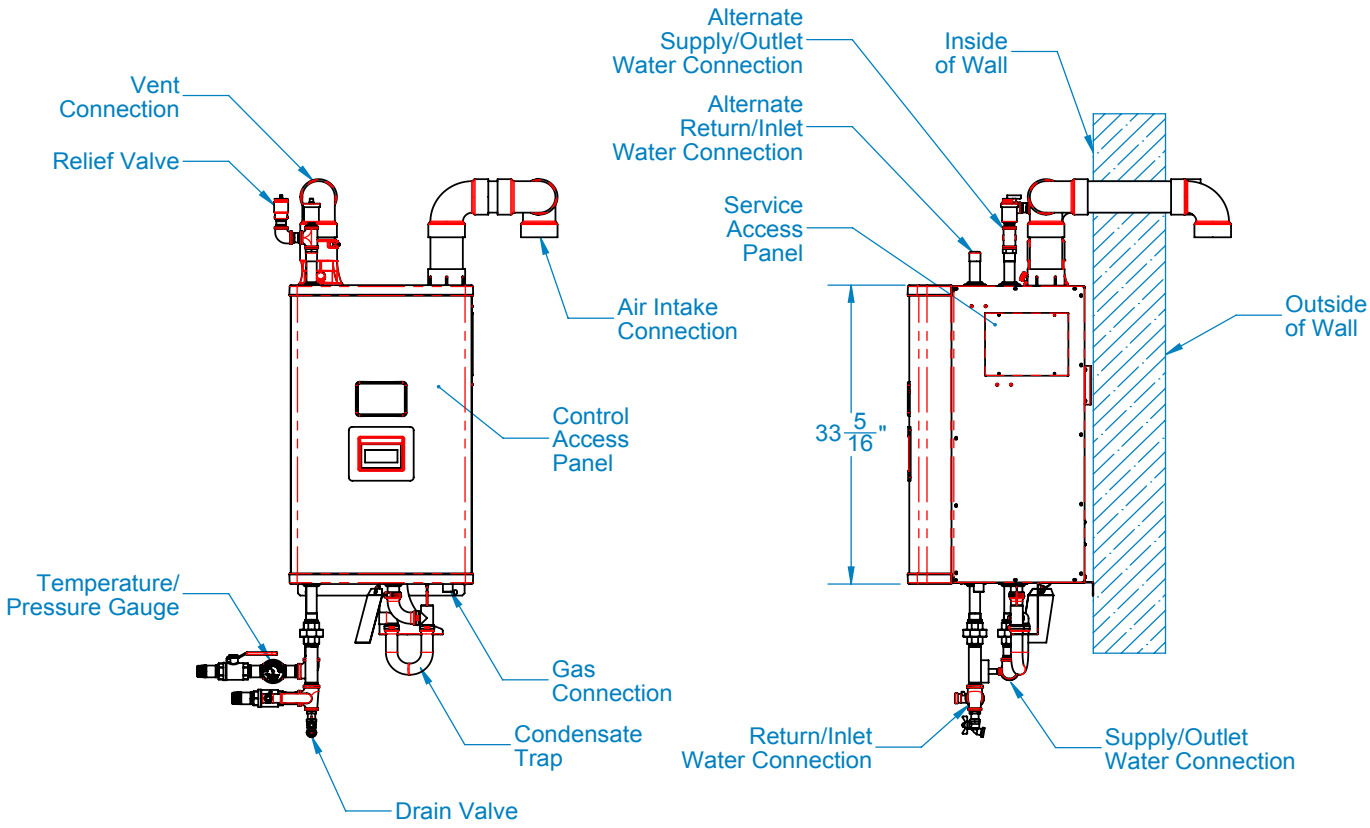

Figure 2.1: General Configuration

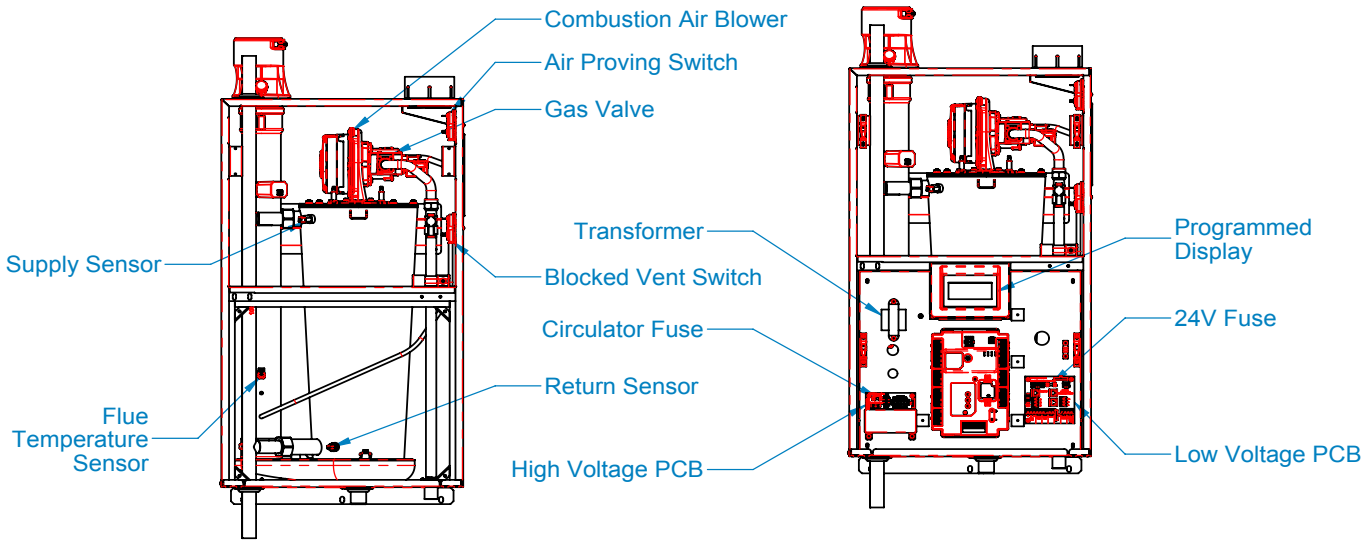

Figure 2.2: Boiler Internal Component Locations

Table 2.3: Specifications

Model *	Maximum Input (MBH)	Minimum Input (MBH)	D.O.E. Heating Capacity (MBH)	AHRI Net Rating * (MBH)	AFUE	Water Volume (Gallon)	Heating Water Connection Size (Copper Sweat)	Gas Connection Size (NPT)	Approx. Net Weight (lb.)	Maximum Allowable Working Pressure (PSI)
RPTR085HB	85	8.5	79	69	96	2.6	1"	1/2"	110	30
RPTR110HB	110	11	103	90	96	2.5	1"	1/2"	115	30
RPTR155HB	155	15.5	145	126	95	3.0	1"	1/2"	120	30
RPTR155CB	155	15.5	145	126	95	3.0	1"	1/2"	140	30
RPTR205HB	205	20.5	189	164	95	5.1	1¼"	1/2"	135	80
RPTR270HB	270	27	252	219	95	4.6	1¼"	1/2"	145	80

***** The Net AHRI Water Ratings shown are based on a piping and pickup allowance of 1.15. The manufacturer should be consulted before selecting a boiler for installations having unusual piping and pickup requirements, such as intermittent system operation, extensive piping systems, etc.

Table 2.4: Vent Lengths

Model Size	Nominal Vent/Intake Size (in)	Min Vent Length (in)	Max Vent Length (ft)	Approx. Derate at Max Vent (%)
85	2	30	60	7.6
	3	30	135	3.7
110	2	30	60	9.7
	3	30	135	4.2
155	3	30	135	7.2
205	3	30	135	9.7
270	3	30	135	11.3

See Section VII “Venting” for additional requirements and details.

III. Before Installing

1. Safe, reliable operation of this boiler depends upon installation by a professional heating contractor in strict accordance with this manual and the requirements of the authority having jurisdiction.
   - In the absence of an authority having jurisdiction, installation must be in accordance with this manual and the National Fuel Gas Code, ANSI Z223.1. In Canada, installation must be in accordance with the B149.1 Installation Code.
   - Where required by the authority having jurisdiction, this installation must conform to the *Standard for Controls and Safety Devices for Automatically Fired Boilers* (ANSI/ASME CSD-1).
2. Read Section VII “Venting” to verify that the maximum combustion air and exhaust pipe lengths will not be exceeded in the planned installation. Also verify that the vent terminal can be located in accordance with Section VII “Venting”.
3. Make sure that the boiler is correctly sized:
   - For heating systems employing convection radiation (baseboard or radiators), use an industry accepted sizing method such as the *I=B=R* Guide RHH published by the Air-Conditioning, Heating and Refrigeration Institute (AHRI).
   - For new radiant heating systems, refer to the radiant tubing manufacturer’s boiler sizing guidelines.
   - For system which includes an indirect water heater, make sure the boiler has the output called for by the indirect water heater manufacturer’s instructions.
4. All boilers are shipped from the factory configured for 0 - 2,000 ft. altitude. For high altitude installation above 2,000 ft., see Appendix A.
5. All boilers are shipped from the factory configured for use with natural gas. They may be converted for use with LP gas (“propane”) using proper conversion kit per Table 3.1. Use a combustion analyzer and follow all instructions supplied with conversion kit.

Table 3.1 LP Conversion Kits

Size	LP Conversion Kit
85	107934-01
110	107935-01
115	107936-01
205	107937-01
270	107938-01

DANGER

- **Do not attempt to operate this boiler on LP gas without converting it using the proper conversion kit.**
- **Do not attempt to convert this boiler to LP gas without the use of a combustion analyzer.**
- **Failure to follow the conversion instructions will result in operation of the boiler at unsafe Carbon Monoxide (CO) levels and may result in personal injury or loss of life. Improper conversion may also result in unreliable operation, resulting in property damage.**
- **Before attempting to operate this boiler at altitudes above 2,000 ft., follow instructions shown in Appendix A of this manual.**

NOTICE

This product must be installed by a licensed plumber or gas fitter when installed within the Commonwealth of Massachusetts. See Appendix C for additional important information about installing this product within the Commonwealth of Massachusetts.

IV. Locating the Boiler

1. Observe the minimum clearances shown in Figure 4.1. These clearances apply to combustible construction as well as non-combustible walls, floors, ceilings and doors.
2. Note the recommended service clearances in Figure 4.1. These service clearances are recommended, but may be reduced to the combustible clearances provided:
   a. Access to the front of the boiler is provided through a door.
   b. Access is provided to the condensate trap located beneath the boiler.

   Note that servicing the boiler will become increasingly difficult as these service clearances are reduced.
3. Observe the following clearances from piping to combustible construction:

   Non-concentric vent (exhaust): ¼"

   Air intake piping: 0"

   Hot water piping: ¼"
4. The relief valve and gauge must be installed in the location shown in Figure 2.1 and must be in the same space as the boiler.
5. The boiler should be located so as to minimize the length of the vent system.
6. The combustion air piping must terminate where outdoor air is available for combustion and away from areas that will contaminate combustion air. Avoid areas near chemical products containing chlorine, chloride based salts, chloro/fluoro carbons, paint removers, cleaning solvents and detergents.

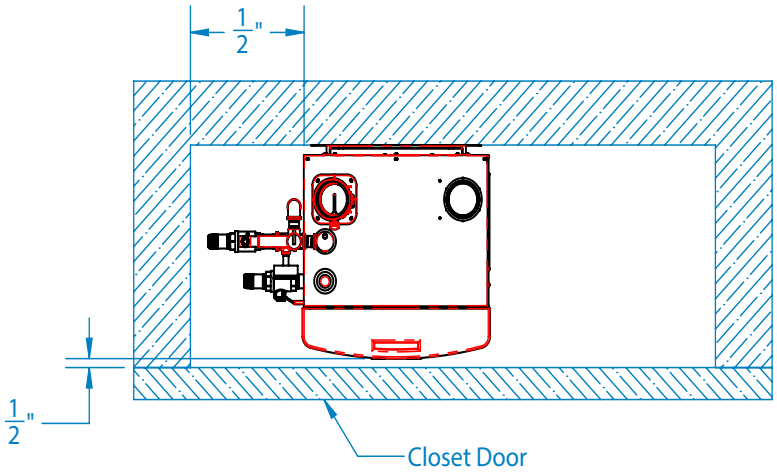

This boiler is listed for closet installation with the following clearances from the boiler jacket to combustible construction:
Top: 11-5/8", Sides: 1/2", Front: 1/2", Bottom: 6"

This above clearances also apply to non-combustible walls, doors, ceilings and floors.

Clearances from piping to combustible construction:
Non-Concentric Vent (Exhaust): 1/4"
Air Intake Piping: 0"
Hot Water Piping: 1/4"

Recommended Service Clearances:
Right Side: 24", Front: 24", Bottom: 24"

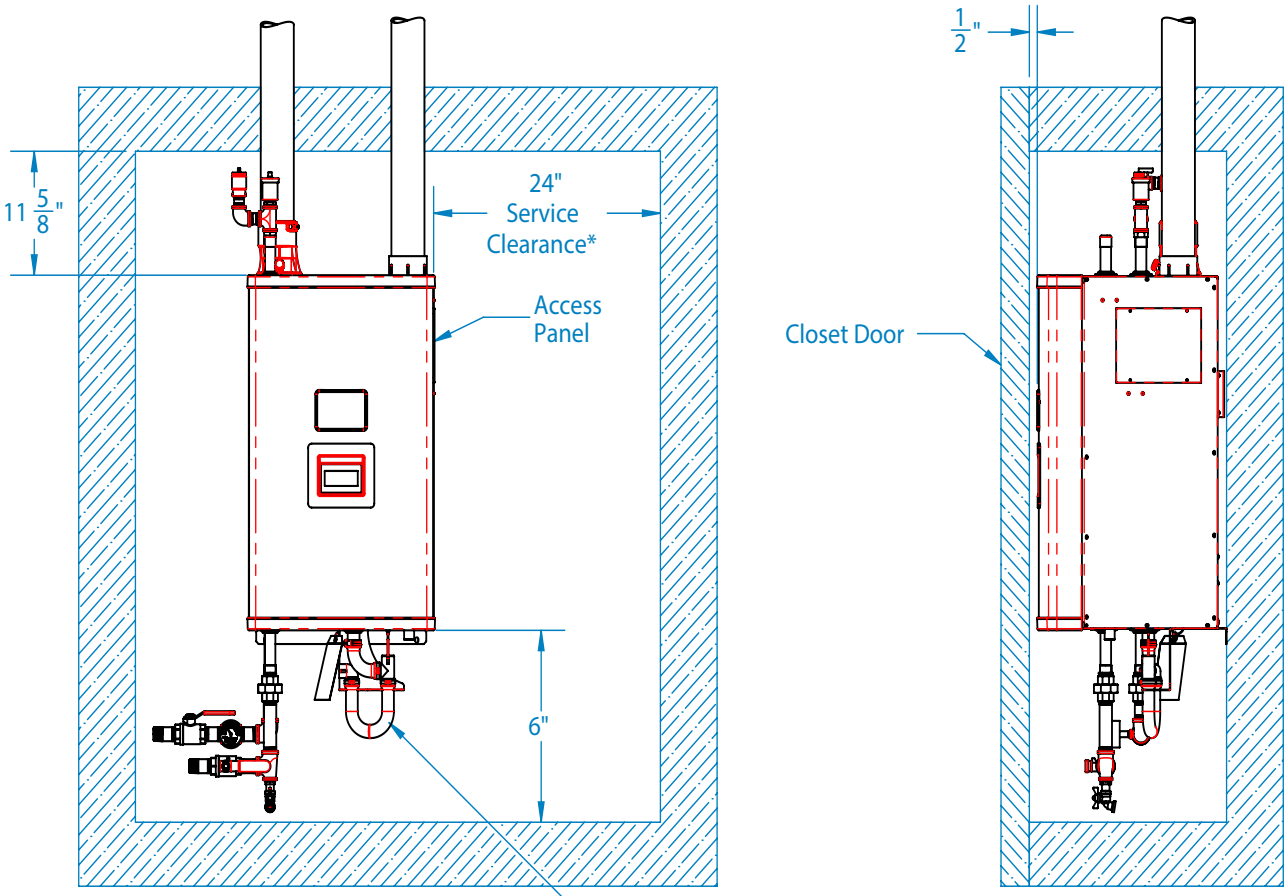

*Right side clearance may be reduced to 1/2" however relief valve must remain in same space as boiler.

Provide access to this area for inspection and cleanout of condensate trap.

Figure 4.1: Minimum Clearances To Combustible Construction

V. Mounting The Boiler

A. Wall Mounting

CAUTION

- **Two people are required to safely lift this boiler onto the wall mounting hook.**
- **Make sure that wall mounting hook is anchored to a structure capable of supporting the weight of the boiler and attached piping when filled with water. Jurisdictions in areas subject to earthquakes may have special requirements for supporting this boiler. These local requirements take precedence over the requirements shown below.**

1. If the boiler is installed on a framed wall, minimum acceptable framing is 2 x 4 studs on 16" centers. The boiler mounting holes are on 16" centers for installation between two studs at the standard spacing. In cases where the boiler cannot be centered between the studs, or where the studs are spaced closer than 16" apart, the boiler may be anchored to ¾" plywood or horizontal 2 x 4's anchored to the studs.
2. 5/16" x 2" lag screws and washers are provided for mounting this boiler. These lag screws are intended for mounting the boiler directly onto studs covered with ½" sheathing. When the boiler is attached to other types of construction, such as masonry, use fasteners capable of supporting the weight of the boiler and attached piping in accordance with good construction practice and applicable local codes.
3. Make sure that the surface to which the boiler is mounted is plumb.
4. Before mounting the boiler, make sure that wall selected does not have any framing or other construction that will interfere with the vent pipe penetration.
5. Once a suitable location has been selected for the boiler, and any needed modifications have been made to the wall, use Figure 5.1 to locate holes "A" and "B". Make sure that the horizontal centerline of these holes is level. Holes "C" and "D" may also be drilled at this time or after the boiler is hung on the wall. If the 5/16" x 2" lag screws are used, drill 3/16" pilot holes.
6. The wall mounting hook is used to secure the boiler to the shipping pallet. Remove this hook from the pallet and secure to the wall using the 5/16" x 2" lag screws and washers, or other suitable anchors as appropriate (Figure 5.2). Make sure the hook is level.
7. Hang the boiler on the wall hook as shown in Figure 5.2.
8. If not already done in Step (5) locate and drill holes "C" and "D" using the obround slots in the bottom mounting flange. Secure the bottom flange to the wall using the 5/16"x 2" lag screws, or other fasteners as appropriate (Figure 5.2).
9. Verify that the front of the boiler is plumb. If it is not, install washers at holes "C" and "D" between the bottom mounting flange and the wall to adjust.

DIMENSIONS			
	85-110 MBH	155 MBH/ 155 MBH COMBI	205-270 MBH
A	11-1/4"	11-1/4"	11-5/16"
B	22-7/8"	22-7/8"	22-3/16"
C	3-3/4"	1-7/16"	1-11/16"
D	11-5/16"	13-5/8"	13-3/8"
E	1/2"	1/2"	0"

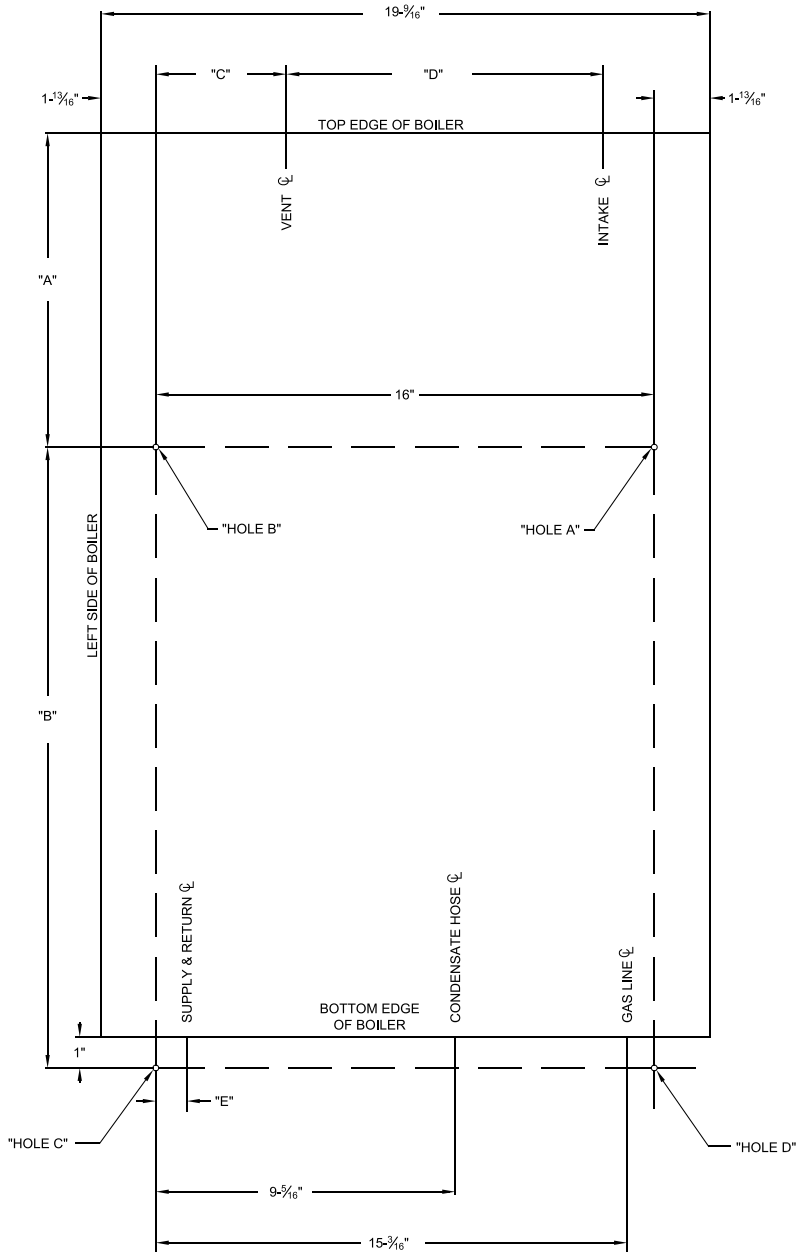

Figure 5.1 Wall Layout / Mounting Hole Location

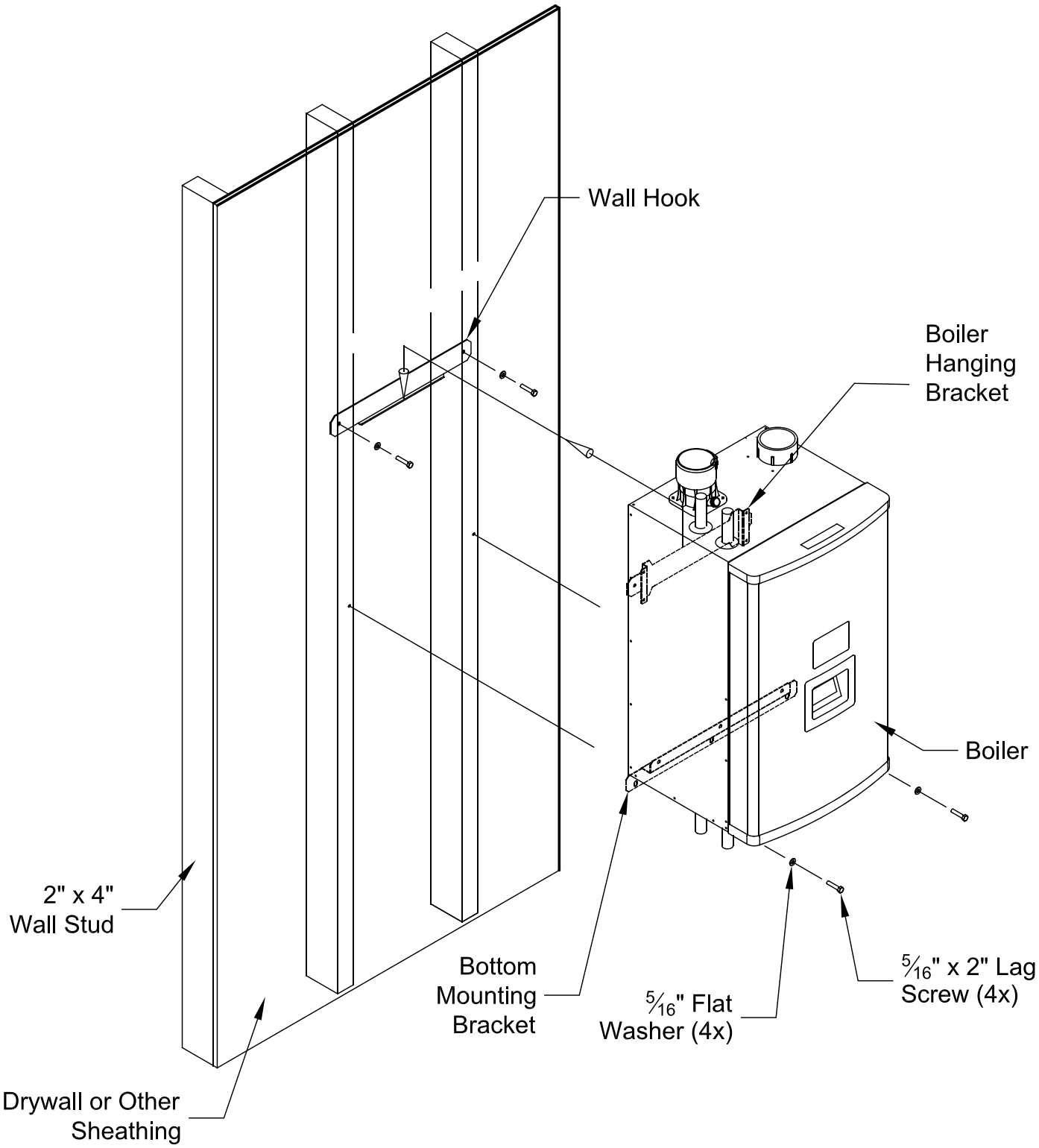

Figure 5.2 Boiler Mounting Bracket Installation / Boiler Wall Mounting

VI . Air for Ventilation

WARNING

Outdoor combustion air must be piped to the air intake. Never pipe combustion air from areas containing contaminates such as swimming pools and laundry room exhaust vents. Contaminated combustion air will damage the boiler and may cause property damage, personal injury or loss of life.

Air for combustion must always be obtained directly from outdoors. See Section VII “Venting” for intake piping. Adequate air for ventilation will be present if the clearances specified in this manual are maintained. If this boiler is installed in a room with other appliances, provide adequate air for combustion and/or ventilation air in accordance with the manufacturer’s installation manual or applicable code.

VII. Venting

WARNING

Asphyxiation Hazard. Failure to vent this boiler in accordance with these instructions could cause products of combustion to enter the building resulting in severe property damage, personal injury or death.

Do not interchange vent systems or materials unless otherwise specified.

The use of thermal insulation covering vent pipe and fittings is prohibited.

Do not use a barometric damper, draft hood or vent damper with this boiler.

When using the CPVC/PVC vent option, the use of CPVC is required when venting in vertical or horizontal chase ways.

Do not locate vent termination where exposed to prevailing winds. Moisture and ice may form on surface around vent termination. To prevent deterioration, surface must be in good repair (sealed, painted, etc.).

Do not locate air intake vent termination where chlorines, chlorofluorocarbons (CFC's), petroleum distillates, detergents, volatile vapors or other chemicals are present. Severe boiler corrosion and failure will result.

The use of cellular core PVC (ASTM F891), cellular core CPVC or Radel (polyphenolsulfone) is prohibited.

Do not locate vent termination under a deck.

Do not reduce specified diameters of vent and combustion air piping.

When installing vent pipe through chimney, as a chase, no other appliance can be vented into the chimney.

Do not allow low spots in the vent where condensate may pool.

DANGER

Failure to follow this warning could result in asphyxiation and/or carbon monoxide poisoning. Correct venting material and installation is required for proper vent operation. PVC Vent Systems must include at least 30 inches of CPVC and one CPVC elbow between the boiler and PVC vent piping. See this Section, VII. Venting for complete information.

A. Vent System Design

There are three basic ways to vent this boiler:

- **Horizontal ("Side Wall") Twin Pipe Venting (Figure 7.0a)** - Vent system exits the building through an outside wall. Combustion air and flue gas are routed between the boiler and the terminal(s) using separate pipes for at least part of the way. A summary of Horizontal Twin Pipe venting options is shown in Table 7.5.
- **Vertical Twin Pipe Venting (Figure 7.0b)** - Vent system exits the building through a roof. Combustion air and flue gas are routed between the boiler and the terminal(s) using separate pipes for at least part of the way. A summary of Vertical Twin Pipe venting options is shown in Table 7.13
- **Split Venting (Figure 7.0c)** - Exhaust system exits the building through a roof, and combustion air is drawn from a terminal mounted on the side wall. A summary of split venting options is shown in Table 7.21

All of these systems are considered "direct vent" because the air for combustion is drawn directly from the outdoors into the boiler. One of the vent option columns in Tables 7.5, 7.13, 7.21 must match the planned vent and air intake system exactly.

Design details applying to all vent systems are shown in this section. Observe all design requirements in this section, as well as those unique to the type of system being installed:

- B - Design Requirements Unique to Horizontal Twin Pipe Vent Systems
- C - Design Requirements Unique to Vertical Twin Pipe Vent Systems
- D - Design Requirements Unique to Split Vent Systems

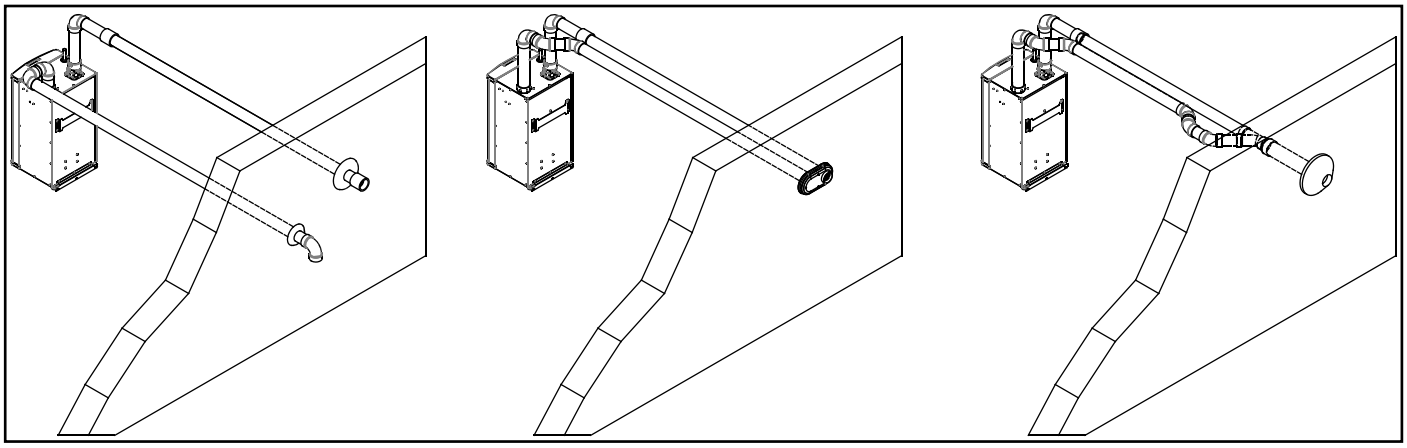

Figure 7.0a: Horizontal Twin Pipe

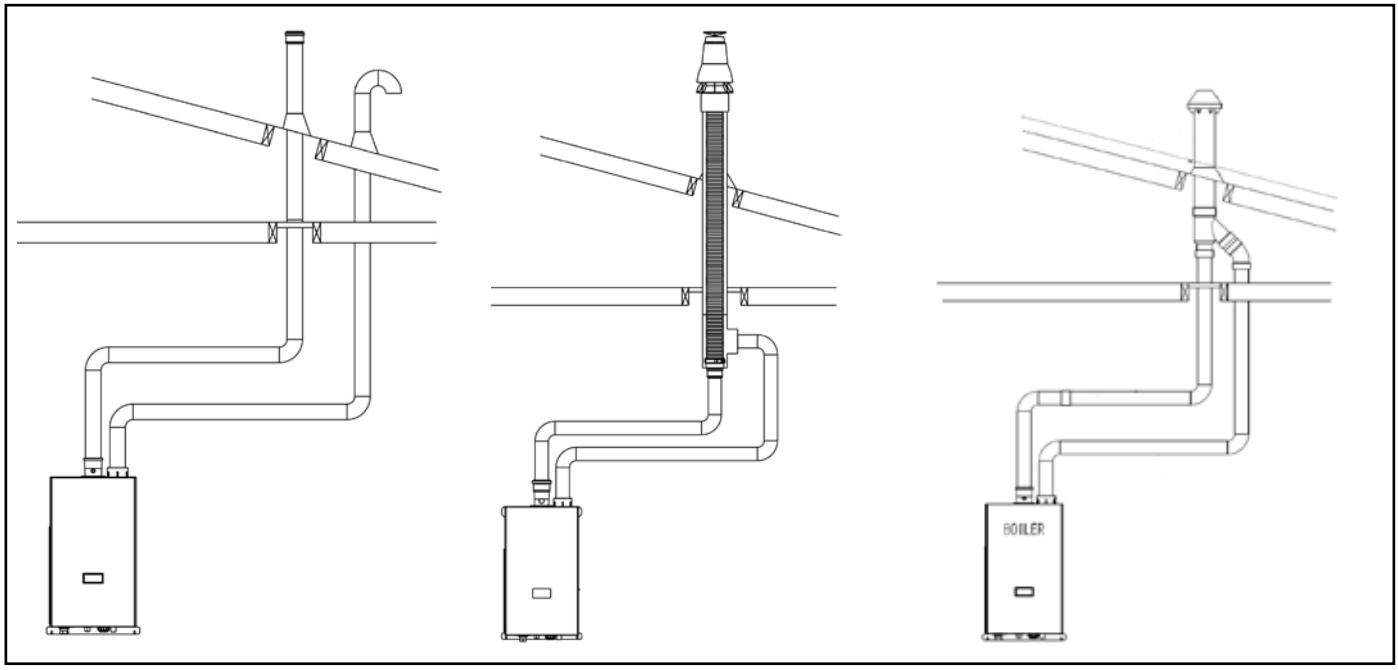

Figure 7.0b: Vertical Twin Pipe

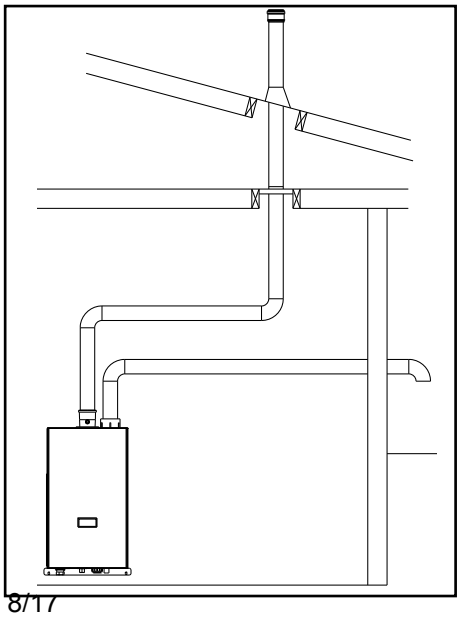

Figure 7.0c: Split Venting

1. Listed Vent Systems and Materials – The following materials and vent systems may be used to vent this boiler:
   - CPVC – Use only CPVC listed to ASTM F441. In Canada, this pipe must also be listed to ULC S636.
   - PVC – PVC may be used only as permitted in this manual. All PVC must be listed to ASTM D2665. At least 30" of CPVC pipe, and at least one CPVC elbow, must be installed between the boiler's vent connection and the PVC pipe. Use of foam core PVC is not permitted for venting. PVC vent pipe may not be used to vent this boiler in Canada.
   - DuraVent PolyPro - ULC S636 listed PolyPropylene special gas vent system.
   - Selkirk Polyflue - ULC S636 listed PolyPropylene special gas vent system.
   - Centrotherm InnoFlue SW - ULC S636 listed PolyPropylene special gas vent system.
   - DuraVent FasNSeal Flex-UL 1738 listed Stainless Steel Special gas vent system.
   - Use PVC and/or CPVC for the air intake system. PVC may be used for all air intake piping between the intake terminal and the boiler.
   - When CPVC and/or PVC pipe is used, it must be joined using primer and cement that is listed for use with the pipe material being joined (PVC, CPVC, or CPVC to PVC).

2. Vent Kits Available for Use with this Boiler - The following vent kits are available for CPVC/PVC vent systems installed with this boiler in the USA:
   - 107039-01 - 2" CPVC/PVC Vent Kit
   - 107039-02 - 3" CPVC/PVC Vent Kit

   These kits include the following:

   (1) 30" CPVC Straight Pipe

   (1) 90 degree short bend CPVC Elbow

   (1) Straight PVC Coupling (for exhaust terminal)

   (1) 90 degree PVC Elbow (for intake terminal)

   (2) Rodent screens

   The CPVC Pipe and elbow supplied with these kits are not listed to ULC S636 and may not be used in Canada.

3. Maximum Vent and Air Intake Lengths - The maximum length of the vent air intake piping depends upon the vent option selected and the boiler size. See Tables 7.5, 7.13 or 7.21 for the maximum vent lengths. These maximum lengths apply to both the vent and intake piping (e.g. Option 1 may have up to 60ft of intake and 60ft of vent piping). For all vent systems, the lengths shown in Tables 7.5, 7.13 and 7.21 are in addition to the first 90° elbow. If more elbows are desired, the maximum allowable vent length must be reduced by the amount shown in Table 7.1 for each additional elbow used. Termination fittings are never counted.

   It is recommended that all field supplied PVC or CPVC elbows be "1/4 Bend" (Sanitary 90° El) or "Long Sweep 1/4 Bend" type elbows (Figure 7.2). In this manual "sanitary" and "long sweep" elbows are treated as having the same equivalent length.

   Example:

   A 3" twin pipe horizontal CPVC/PVC vent system is planned for a horizontally vented 155MBH model which has the following components in the vent system:
   - *1 ft CPVC Straight Pipe*
   - *90 CPVC Elbow (short bend)*
   - *1-1/2 ft CPVC Straight Pipe*
   - *Coupling*
   - *10 ft PVC Straight Pipe*
   - *90 PVC Elbow (Sanitary Elbow Design)*
   - *15 ft PVC Straight Pipe*
   - *PVC Coupling Terminal*

   The Vent Option #2 column in Table 7.5 describes a horizontal direct vent system using 3" CPVC and PVC pipe. From this column, we see that the boiler may have a vent length of up to 135ft. The first CPVC 90 degree elbow is not considered. From Table 7.1, we see that the equivalent length of the 90 PVC elbow is 4ft and that the equivalent length of the coupling is 0ft. The total equivalent length of the planned venting system is therefore:

   1ft (Straight CPVC) + 0ft (first short bend CPVC 90 Elbow) + 1.5ft (Straight CPVC) + 0ft (Coupling) + 10ft (Straight PVC) + 4ft (PVC 90 Sanitary Elbow) + 15ft (Straight PVC) + 0ft (Coupling Terminal) = 31.5ft.

   Since Table 7.1 shows a maximum allowable vent length of 135ft, the planned vent system length is acceptable

   The flex venting used on some of the Vertical Twin Pipe and Split Vent Options also reduces the maximum allowable vent length. See Sections VII-C or VII-D for details.

NOTICE

Do not exceed maximum vent/combustion air system length. Refer to Tables 7.1 and 7.13 in this section for maximum vent/combustion air system length.

Use only vent and combustion air terminals and terminal locations shown in Tables 7.5, 7.13, and 7.21 and related Figures in this section.

4. Minimum Vent and Air Intake Lengths - Observe the minimum vent lengths shown in Tables 7.5, 7.13 and 7.21.
5. Clearances to Combustibles - Maintain the following clearances from the vent system to combustible construction:
   - Vent - 1/4" (also observe clearances through both combustible and non-combustible walls - see 9 below)
   - Air Intake - 0"
   - Concentric Portion of Concentric Terminals - 0"
6. Pitch of Horizontal Vent Piping - Pitch all horizontal vent piping so that any condensate which forms in the piping will run towards the boiler.
   - Pitch CPVC/PVC vent piping 1/4" per foot.
   - Pitch PolyPropylene vent piping 5/8" per foot.

   For Category I, II, and IV boilers, have horizontal runs sloping upwards not less than 1/4 inch per foot (21 mm/m) from the boiler to the vent terminal.

   Les chaudières de catégories I, II et IV doivent présenter des tronçons horizontaux dont la pente montante est d'au moins 1/4 po par pied (21 mm/m) entre la chaudière et l'évent.

Table 7.1: Vent/ Air Intake Fitting Equivalent Length

CPVC/PVC Fitting	Equivalent Length (ft)	PolyPro, Polyflue or InnoFlue Vent Fitting	Equivalent Length (ft)
2" 90° Elbow ("Sanitary Bend")	2.6	2" 90° Elbow	4.5
3" 90° Elbow ("Sanitary Bend")	4.0	3" 90° Elbow	8.7
2" 90° Elbow ("Short Bend")	6.0	2" 45° Elbow	2.5
3" 90° Elbow ("Short Bend")	10.0	3" 45° Elbow	4.6
2" 45° Elbow	1.5		
3" 45° Elbow	2.0		
2" Coupling	0.0		
3" Coupling	0.0		

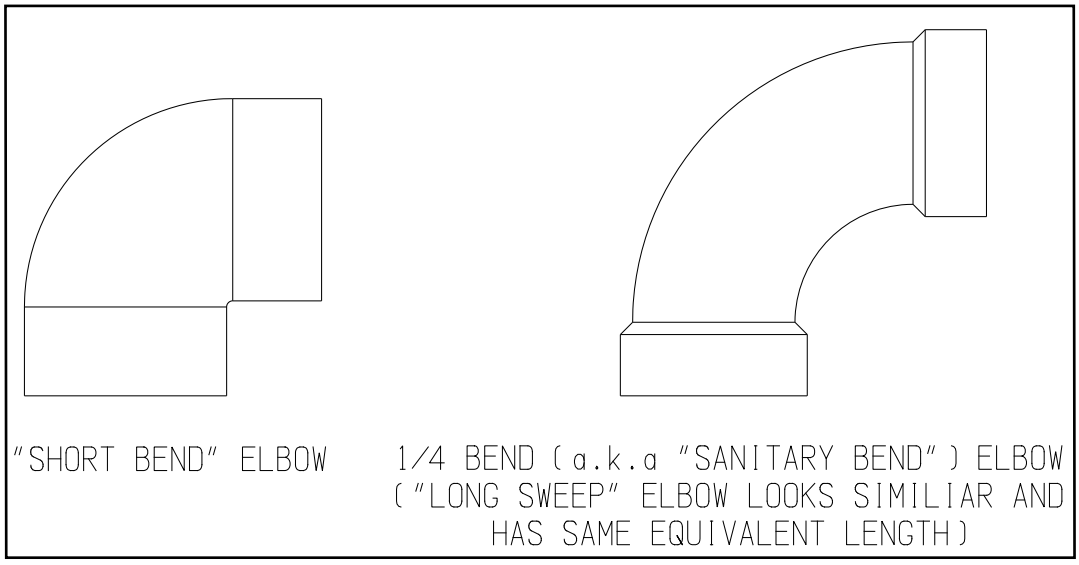

Figure 7.2: CPVC and PVC Elbows

7. Supporting Pipe - Vertical and horizontal sections of pipe must be properly supported. Maximum support spacing is as follows:

   - Support CPVC/PVC horizontally and vertically every 4 feet.
   - Support DuraVent PolyPro horizontally near the female end of each straight section of pipe and vertically every 10 feet.
   - Support Centrotherm InnoFlue horizontally every 39 inches with additional supports at elbows and vertically every 78".
   - Support 2" Selkirk Polyflue horizontally every 30". Support 3" Polyflue horizontally every 39". Support vertical runs of both 2" and 3" Polyflue every 16 ft.
   - Support DuraVent FasNSeal horizontally every 6 ft. or less. Support vertical runs at the base and every 12 ft. or less.

   These instructions for the installation of the venting system shall specify that the horizontal portions of the venting system shall be supported to prevent sagging; the methods of and intervals for support shall be specified. These instructions shall also specify that the venting system:

   - For category II and IV boilers, be installed so as to prevent accumulation of condensate.
   - For category II and IV boilers, where necessary, have means provided for drainage of condensate.

   Les instructions d´installation du système d´évacuation doivent préciser que les sections horizontales doivent être supportées pour prévenir le fléchissement. Les méthodes et les intervalles de support doivent être spécifiés. Les instructions divent aussi indiquer les renseignements suivants:

   - les chaudières de catégories II et IV doivent être installées de façon à empêcher l´accumulation de condensat:
   - et si nécessaire, les chaudières de catégories II et IV doivent être pourvues de dispositifs d´évacuation du condensat.

8. Allowing for Thermal Expansion -

   - For CPVC/PVC pipe design the vent system to allow 3/8" of thermal expansion for every 10ft of CPVC/PVC pipe. The boiler will always act as an anchor to one end of the vent system. If at all possible, select and install hangers and wall thimbles so that the vent system can expand towards the terminal. When a straight run of pipe exceeds 20ft and must be restrained at both ends, an offset or expansion loop must be provided (Figures 7.3a, 7.3b). When a straight horizontal run of pipe exceeds 20ft and is restrained at one end with an elbow at the other, avoid putting a hanger or guide less than “Y” inches from the elbow in the adjoining straight section (Figure 7.3c). Thermal expansion fittings are not permitted.
   - When properly assembled expansion of PolyPro, Polyflue and InnoFlue vent systems is accommodated at the joints. See Part VII-F, G & H of this manual for details.
   - Stainless steel vent systems must be free to expand and contact in accordance with manufacturer's installation instructions.

9. Running PVC Vent Pipe Inside Enclosures and Through Walls - PVC vent pipe must be installed in a manner that permits adequate air circulation around the outside of the pipe:

   - Do not enclose PVC venting - Use CPVC in enclosed spaces, even if PVC is installed upstream.
   - PVC venting may not be used to penetrate combustible or non-combustible walls unless all of the following conditions are met:
     a. The wall penetration is at least 66 inches from the boiler as measured along the vent.
     b. The wall is 12" thick or less
     c. An airspace of at least that shown in Figure 7.4 is maintained around the OD of the vent.

   If any of these conditions cannot be met, use CPVC for the wall penetration.

10. Vent Manufacturer’s Instructions – The vent system manufacturer may have additional vent system design requirements. Read and follow the vent manufacturer’s instructions in addition to those shown here. Where a conflict arises between the two sets of instructions, the more restrictive requirements shall govern.

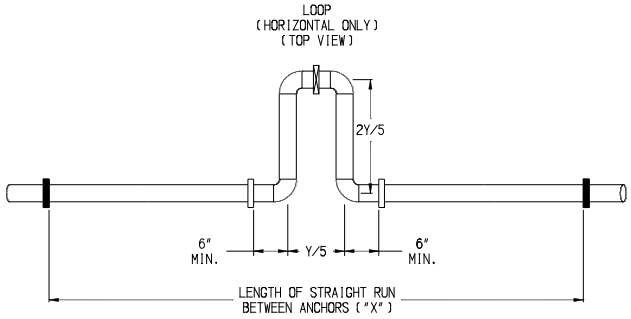

Figure 7.3a

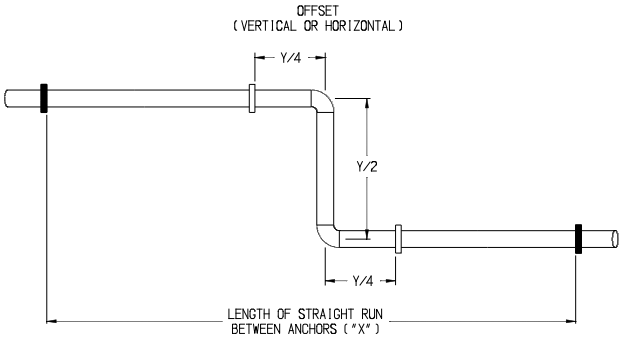

Figure 7.3b

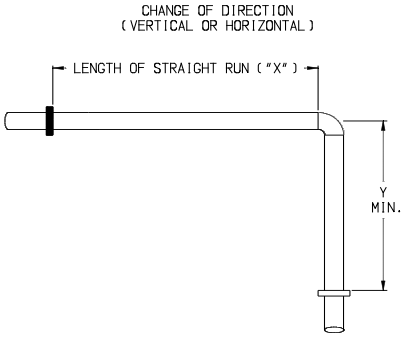

Figure 7.3c

PIPE DIA. (IN.)	"X" (FT.)	"Y" (IN.)
3	20	50
	30	61
	40	70
	50	79
	60	86
4	20	56
	30	69
	40	80
	50	89
	60	98

KEY

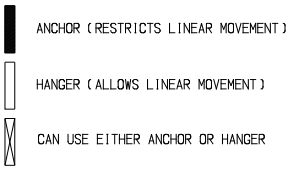

Figure 7.3: Expansion Loops for CPVC/PVC Pipe

MAX. WALL THICKNESS ("T")	2"*	6"	12"
MINIMUM AIR SPACE AROUND PIPE ("C")	0"*	1"	1-3/4"

*WALL MUST BE OF NON-COMBUSTIBLE CONSTRUCTION

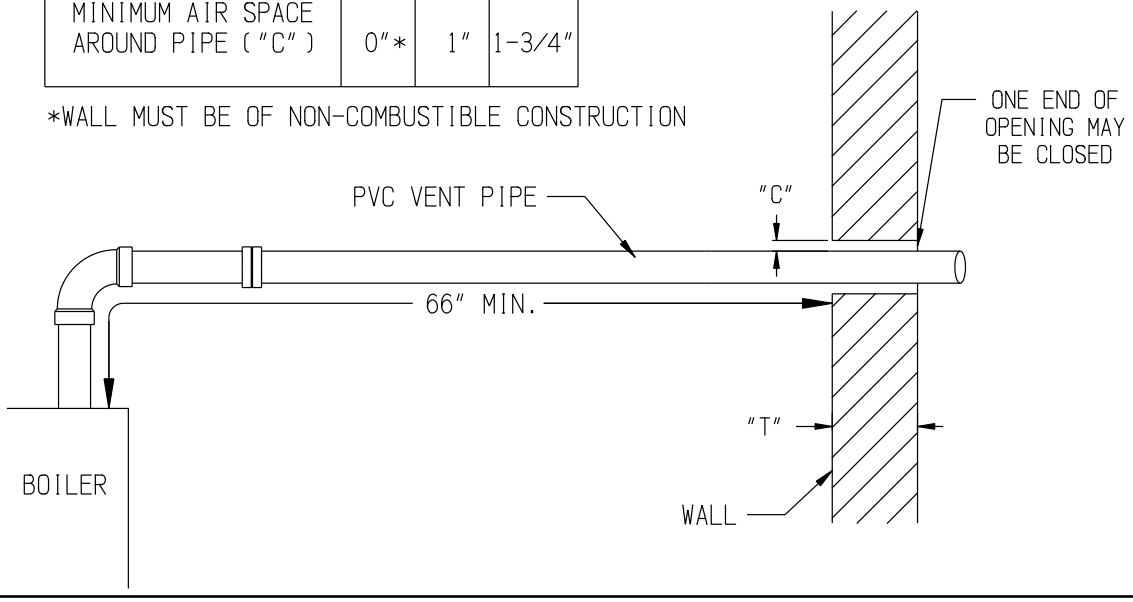

Figure 7.4: Wall Penetration Clearances for PVC Vent Pipe

B. Design Requirements Unique to Horizontal Twin Pipe Venting Systems

Table 7.5 summarizes all horizontal twin pipe vent options. Illustrations of horizontal twin pipe vent systems are shown in Figures 7.6 – 7.10. In addition to the requirements in Part VII-A, observe the following design requirements:

1. Permitted Terminals for Horizontal Venting:

Terminal Option A: Fittings (Acceptable for Vent Options 1-8) – Vent terminates in a plain end (coupling for PVC, bell end for PolyPro, Polyflue and plain end pipe for InnoFlue). Intake terminates in a PVC 90 sweep elbow pointing down. Outer edge of both terminals must be within 10" of the wall surface (Figures 7.6, 7.9). The section of DuraVent PolyPro, Centrotherm InnoFlue or Selkirk Polyflue exposed to the outdoors must be UV resistant.

Use of rodent screens is generally recommended for both terminations. Two rodent screens suitable for 3" PVC terminals are installed as shown in Figure 7.27. If 2" CPVC is used, these screens can be cut to fit into the smaller fittings. Rodent screens ("bird guards") for PolyPro, InnoFlue and Polyflue are as follows:

Size/Vent System	Rodent Screen ("Bird Guard")
2" PolyPro	DuraVent # 2PPS-BG
3" PolyPro	DuraVent # 3PPS-BG
2" Polyflue	Selkirk # 2PF-HVST
3" Polyflue	Selkirk # 3PF-HVST
2" InnoFlue	Centrotherm # IASPP02
3" InnoFlue	Centrotherm # IASPP03

If necessary to achieve required clearance above grade, CPVC or CPVC/PVC vent systems may be terminated using fittings on snorkels as shown in Figure 7.12. When this is done, the equivalent length of all pipe on the exterior of the building, except for the terminal fittings themselves, must be counted when calculating the equivalent length. The maximum vertical run of the snorkel is 7 feet. Brace both the vent and inlet piping if required. PolyPro, InnoFlue and Polyflue may not be snorkeled.

Terminal Option B: Ipex Low Profile Terminal (Acceptable for Vent Options 1,2) – This terminal is shown in Figure 7.7. If the terminal is oriented vertically (alternate orientation shown in Fig 7.7) the exhaust opening must be on the top as shown. See Part VII-E of this manual and the Ipex instructions provided with the terminal, for installation details.

Terminal Option C: Diversitech "Low Profile" Terminal (Acceptable for Vent Options 1,2) – This terminal is shown in Figure 7.7. If the terminal is oriented vertically (alternate orientation shown in Fig 7.7) the exhaust opening must be on the top as shown. See Part VII-E of this manual and the Diversitech instructions provided with the terminal, for installation details.

Terminal Option D: Ipex FGV Concentric Terminal (Acceptable for Vent Options 1,2) - This terminal is shown in Figure 7.8 and may be used with CPVC/PVC vent systems. This terminal is available in various lengths and in both PVC and CPVC. Terminals acceptable for use with these vent options are as follows:

Ipex PN	FGV Concentric Terminal Description
196005	2 x 16" PVC
196105	2 x 28" PVC
196125	2 x 40" PVC
196006	3 x 20" PVC
196106	3 x 32" PVC
196116	3 x 44" PVC
197107	3 x 32" CPVC
197117	3 x 44" CPVC

See Part VII-E of this manual and the Ipex instructions provided with the terminal, for installation details.

Terminal Option E: Diversitech Concentric Terminal (Acceptable for Vent Options 1,2) - This terminal is shown in Figure 7.8 and may be used with CPVC/PVC vent systems. See Part VII-E of this manual and the Diversitech instructions provided with the terminal, for installation details.

Terminal Option F: DuraVent PolyPro Concentric Terminal (Acceptable for Vent Options 3,4) - This terminal is shown in Figure 7.10 and may be used with DuraVent 2" or 3" PolyPro vent systems. See Part VII-F of this manual and the DuraVent instructions provided with the terminal, for installation details.

Table 7.5: Summary of Horizontal Twin Pipe Venting Options

Vent Option		**1**	**2**	**3**	**4**	**5**	**6**	**7**	**8**
Illustrated in Figure		7.6, 7.7, 7.8	7.6, 7.7, 7.8	7.9, 7.10	7.9, 7.10	7.9	7.9	7.9	7.9
Pipe Penetration through Structure	Vent	Wall	Wall	Wall	Wall	Wall	Wall	Wall	Wall
	Intake	Wall	Wall	Wall	Wall	Wall	Wall	Wall	Wall
Material	Vent	CPVC/ PVC (Note 2)	CPVC/ PVC (Note 2)	DuraVent PolyPro (Rigid)	DuraVent PolyPro (Rigid)	Selkirk Polyflue	Selkirk Polyflue	Centro-therm InnoFlue SW	Centro-therm InnoFlue SW
	Intake	PVC	PVC	PVC	PVC	PVC	PVC	PVC	PVC
Nominal Diameter	Vent	2"	3"	2"	3"	2"	3"	2"	3"
	Intake	2"	3"	2"	3"	2"	3"	2"	3"
Min Equivalent Vent Length:									
Model Sizes	85	30"	30"	30"	30"	30"	30"	30"	30"
	110	30"	30"	30"	30"	30"	30"	30"	30"
	155	Not Permitted	30"	Not Permitted	30"	Not Permitted	30"	Not Permitted	30"
	205		30"		30"		30"		30"
	270		30"		30"		30"		30"
Max Equivalent Vent Length (Note 1):									
Model Sizes	85	60ft	135ft	60ft	135ft	60ft	135ft	60ft	135ft
	110	60ft	135ft	60ft	135ft	60ft	135ft	60ft	135ft
	155	Not Permitted	135ft	Not Permitted	135ft	Not Permitted	135ft	Not Permitted	135ft
	205		135ft		135ft		135ft		135ft
	270		135ft		135ft		135ft		135ft
Terminal Option A (Fittings)	Vent	Coupling w/screen (Note 3)	Coupling w/screen (Note 3)	2PPS-12B or 2PPS-36B w/screen	3PPS-12B or 3PPS-36B w/screen	2PF-10UV or 2PF-39UV w/screen	3PF-10UV or 3PF-39UV w/screen	ISEP02 or ISEP0239 w/screen	ISEP03 or ISEP0339 w/screen
	Intake	Elbow w/screen (Note 3)	Elbow w/screen (Note 3)	Elbow w/screen	Elbow w/screen	Elbow w/screen	Elbow w/screen	Elbow w/screen	Elbow w/screen
Terminal Option B (Ipex Low Profile)		Ipex # 196984	Ipex #196985	Not Permitted	Not Permitted	Not Permitted	Not Permitted	Not Permitted	Not Permitted
Terminal Option C (Diversitech HVENT)		HVENT-2	HVENT-3	Not Permitted	Not Permitted	Not Permitted	Not Permitted	Not Permitted	Not Permitted
Terminal Option D (Ipex FGV Concentric)		Ipex 196105	Ipex 196006	Not Permitted	Not Permitted	Not Permitted	Not Permitted	Not Permitted	Not Permitted
Terminal Option E (Diversitech CVENT)		CVENT-2	CVENT-3	Not Permitted	Not Permitted	Not Permitted	Not Permitted	Not Permitted	Not Permitted
Terminal Option F (DuraVent Horizontal Concentric)		Not Permitted	Not Permitted	2PPS-HK	3PPS-HK	Not Permitted	Not Permitted	Not Permitted	Not Permitted

Notes:

1. Max vent lengths shown also apply to the intake. For example, Vent Option #1 may have up to 60ft of vent pipe and also up to 60 ft of intake pipe.
2. At least 30" of CPVC pipe, and at least one CPVC elbow, must be installed between the boiler's vent connection and PVC pipe. Downstream vent pipe can be PVC except as noted in text.
3. PVC Terminal coupling and inlet elbow may be offset on snorkels as shown in Figure 7.12.

2. Horizontal Vent and Air Intake Terminal Location - Observe the following limitations on the vent terminal location (also see Figure 7.11). When locating a concentric terminal, observe the limitations outlined below for "vent terminals".
   - Vent terminal must be at least 1 foot from any door, window, or gravity inlet into the building.
   - When Terminal Option A (fittings) are used, maintain the correct clearance and orientation between the intake and exhaust terminals. If possible, locate vent and combustion air terminals on the same wall to prevent nuisance shutdowns. If not, boiler may be installed with roof vent terminal and sidewall combustion air terminal (see Paragraph D). When installed on the same wall, locate exhaust vent terminal at same height or higher than combustion air intake terminal. Horizontal separation: Recommended: 36", Minimum: 12", Maximum: none. Minimum horizontal separation of 12" is required regardless of vertical separation.
   - The bottom of all terminals must be at least 12" above the normal snow line. In no case should they be less than 12" above grade level.
   - The bottom of the vent terminal must be at least 7 feet above a public walkway.
   - Do not install the vent terminal directly over windows or doors.
   - The bottom of the vent terminal must be at least 3 feet above any forced air inlet located within 10 feet.
   - USA Only: A clearance of at least 4 feet horizontally must be maintained between the vent terminal and gas meters, electric meters, regulators, and relief equipment. Do not install vent terminal over this equipment. In Canada, refer to B149.1 Installation Code for clearance to meters, regulators and relief equipment.
   - Do not locate the vent terminal under decks or similar structures.
   - Top of terminal must be at least 24" below ventilated eves, soffits and other overhangs. In no case may the overhang depth exceed 48". Where permitted by the authority having jurisdiction and local experience, the terminal may be located closer to unventilated soffits. For the minimum vertical separation which depends upon the depth of the soffit, see Figure 7.11.
   - Vent terminal must be at least 6 feet from an inside corner.
   - Under certain conditions, water in the flue gas may condense, and possibly freeze, on objects around the vent terminal including on the structure itself. If these objects are subject to damage by flue gas condensate, they should be moved or protected.
   - Install the vent and air intake terminals on a wall away from the prevailing wind. Reliable operation of this boiler cannot be guaranteed if these terminals are subjected to winds in excess of 40 mph.
   - Air intake terminal must not terminate in areas that might contain combustion air contaminates, such as near swimming pools. See WARNING on page 15.

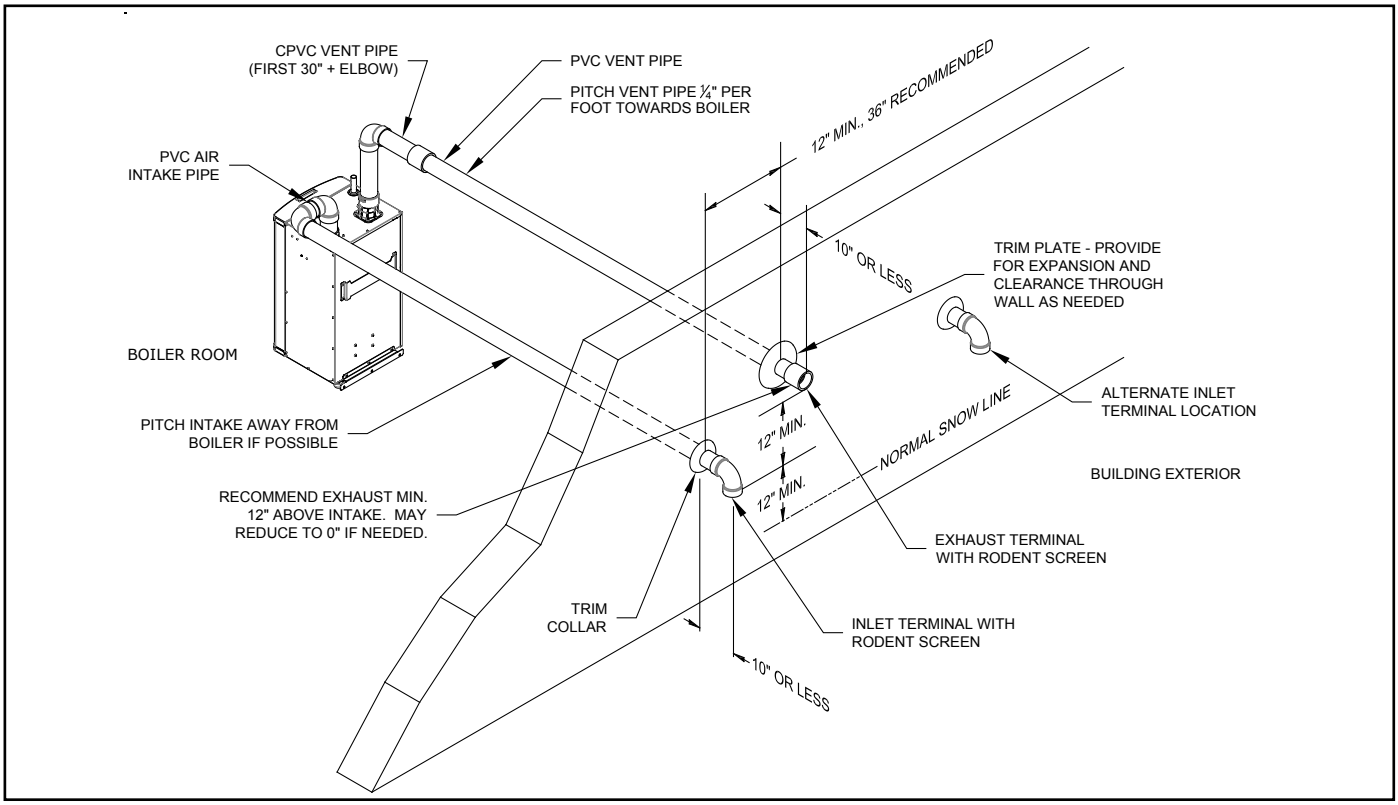

Figure 7.6: Horizontal CPVC/PVC Venting, (Vent Options #1 & 2, Terminal Option A)

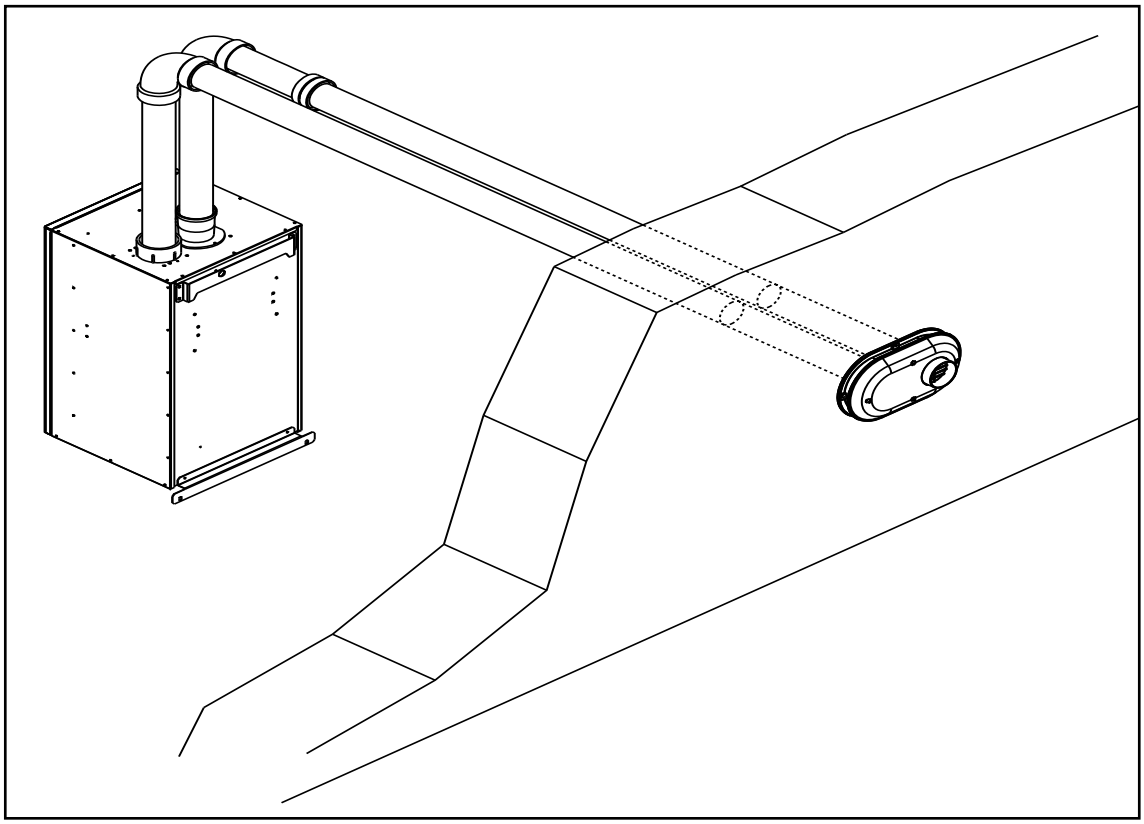

Figure 7.7: Horizontal CPVC/PVC Venting with Low Profile Terminal, (Vent Options #1 & 2, Terminal Options B & C)

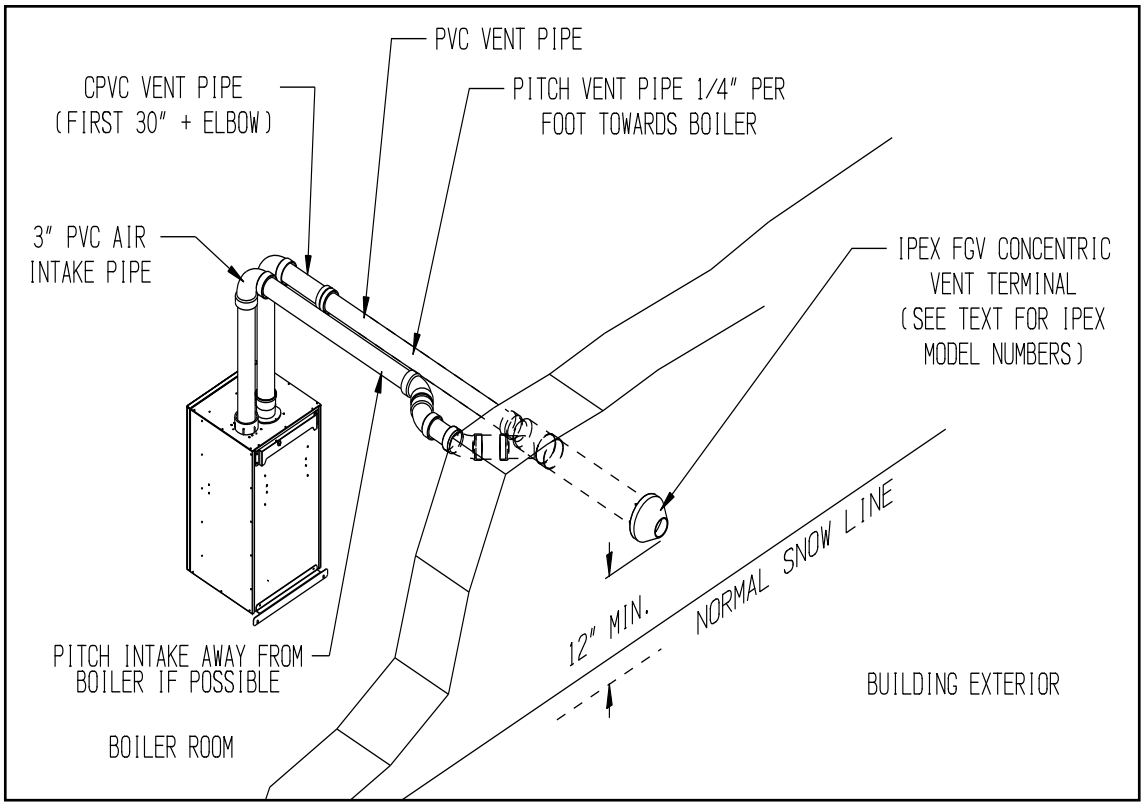

Figure 7.8: Horizontal CPVC/PVC Venting with Concentric Vent Terminal, (Vent Options #1 & 2, Terminal Options D & E)

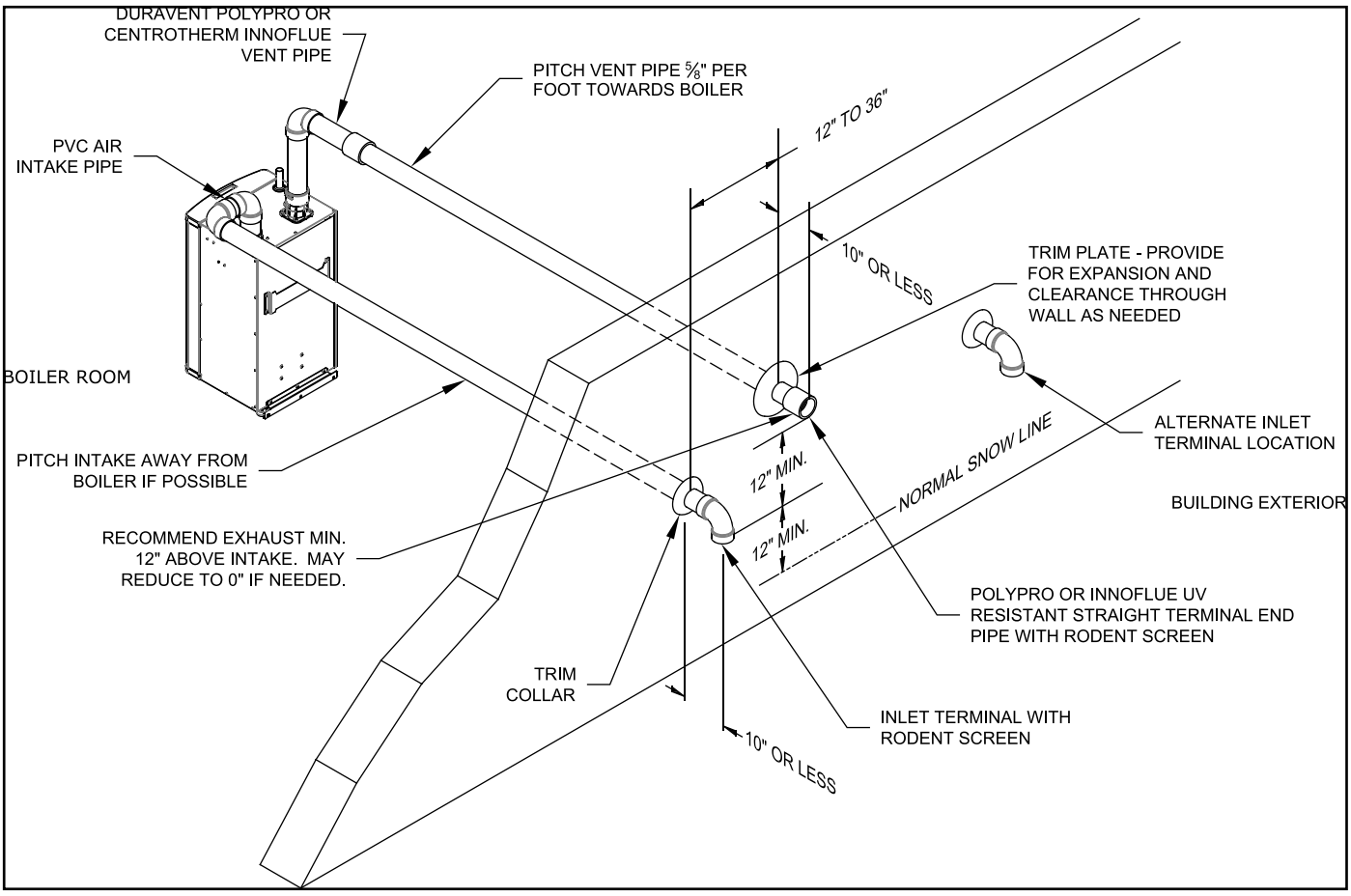

Figure 7.9: Duravent PolyPro, Selkirk, Polyflue or Centrotherm InnoFlue Horizontal Venting (Vent Option #3 - 8, Terminal Option A)

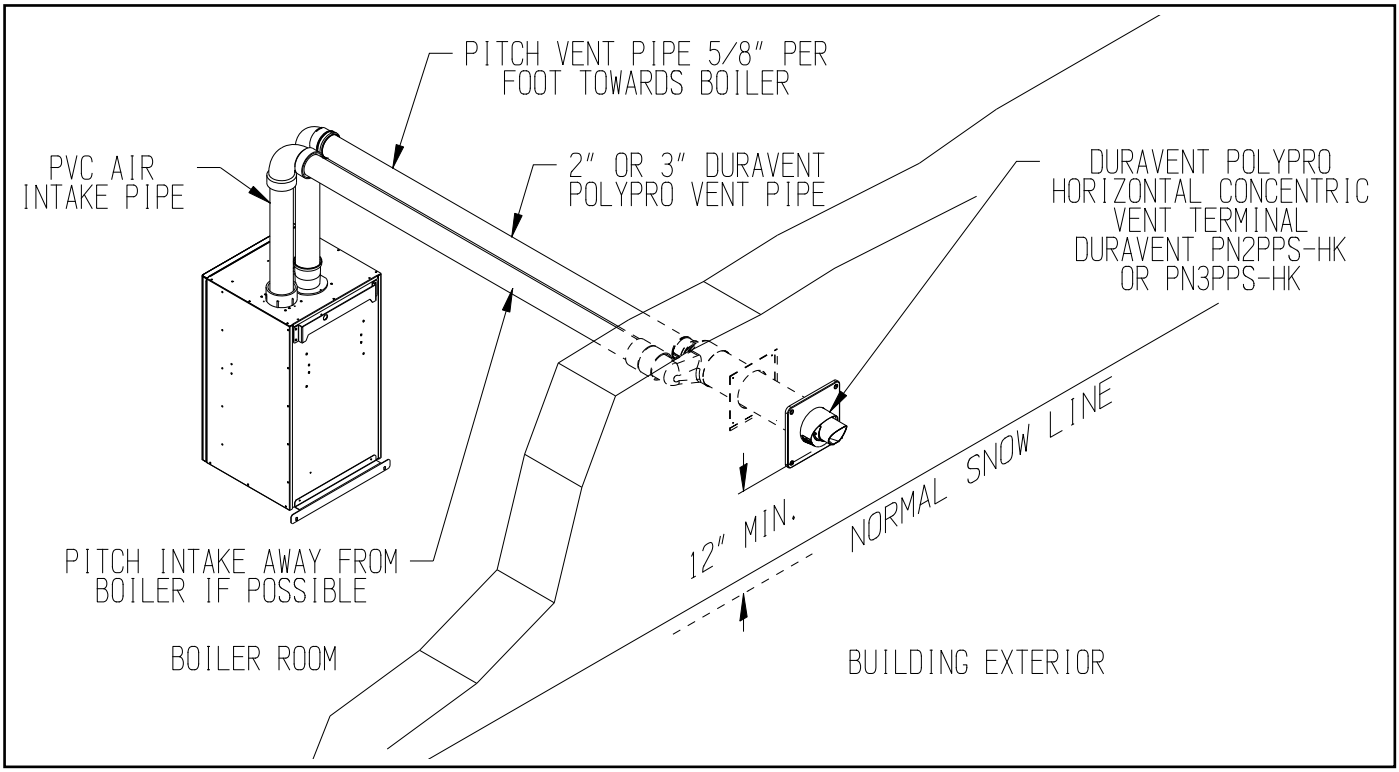

Figure 7.10: Duravent PolyPro Horizontal Venting with Concentric Terminal, (Vent Options #3 & 4, Terminal Option F)

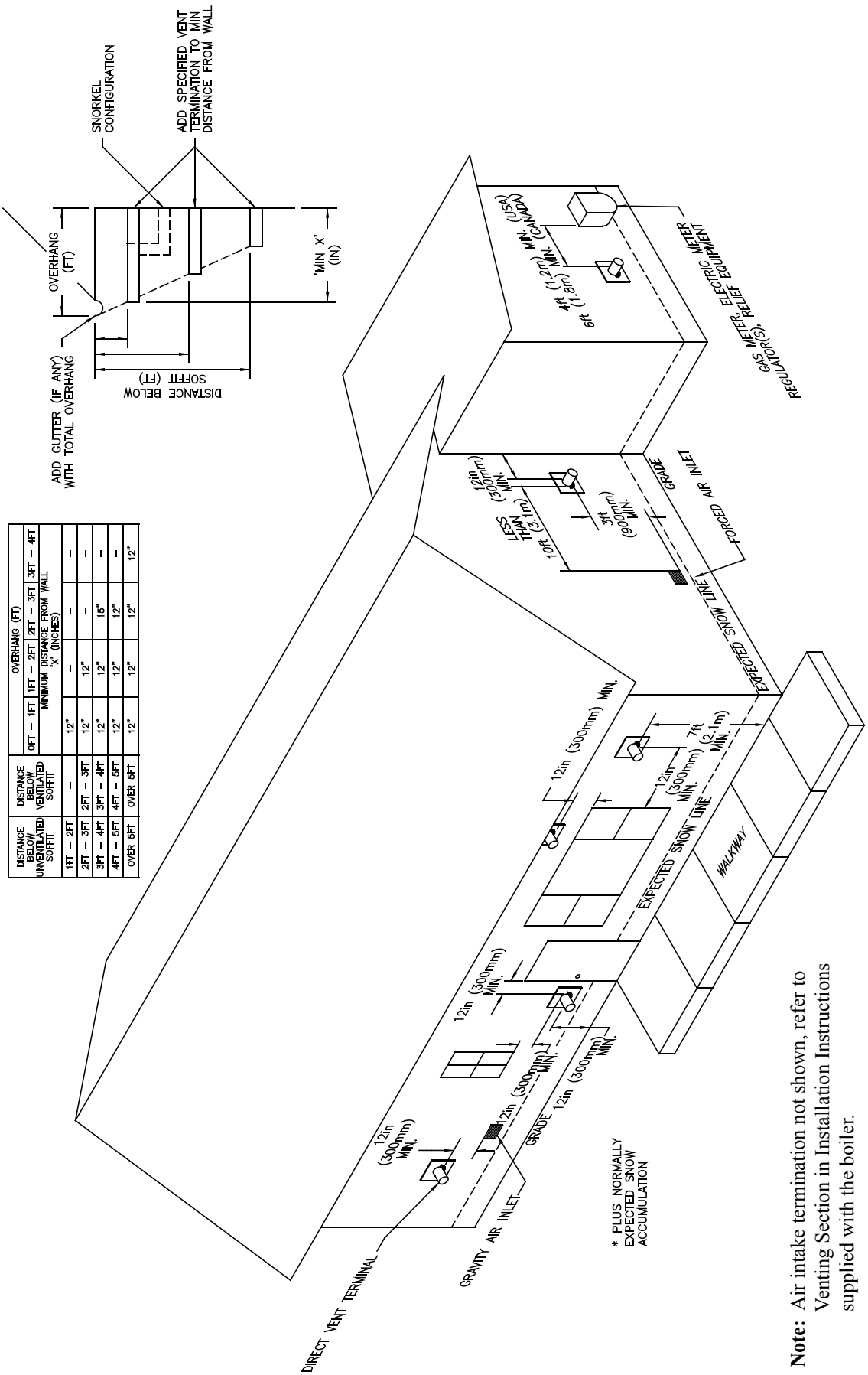

DISTANCE BELOW UNVENTILATED SOFFIT	DISTANCE BELOW VENTILATED SOFFIT	OVERHANG (FT)				
		0FT – 1FT	1FT – 2FT	2FT – 3FT	3FT – 4FT
		MINIMUM DISTANCE FROM WALL 'X' (INCHES)			
1FT – 2FT	–	12"	–	–	–
2FT – 3FT	2FT – 3FT	12"	12"	–	–
3FT – 4FT	3FT – 4FT	12"	12"	16"	–
4FT – 5FT	4FT – 5FT	12"	12"	12"	–
OVER 5FT	OVER 5FT	12"	12"	12"	12"

Note: Air intake termination not shown, refer to Venting Section in Installation Instructions supplied with the boiler.

Figure 7.11: Location of Vent Terminal Relative to Windows, Doors, Grades, Overhangs, Meters and Forced Air Inlets - Two-Pipe System Vent Terminal (Shown) Two-Pipe System Air Intake Terminal (Not Shown)

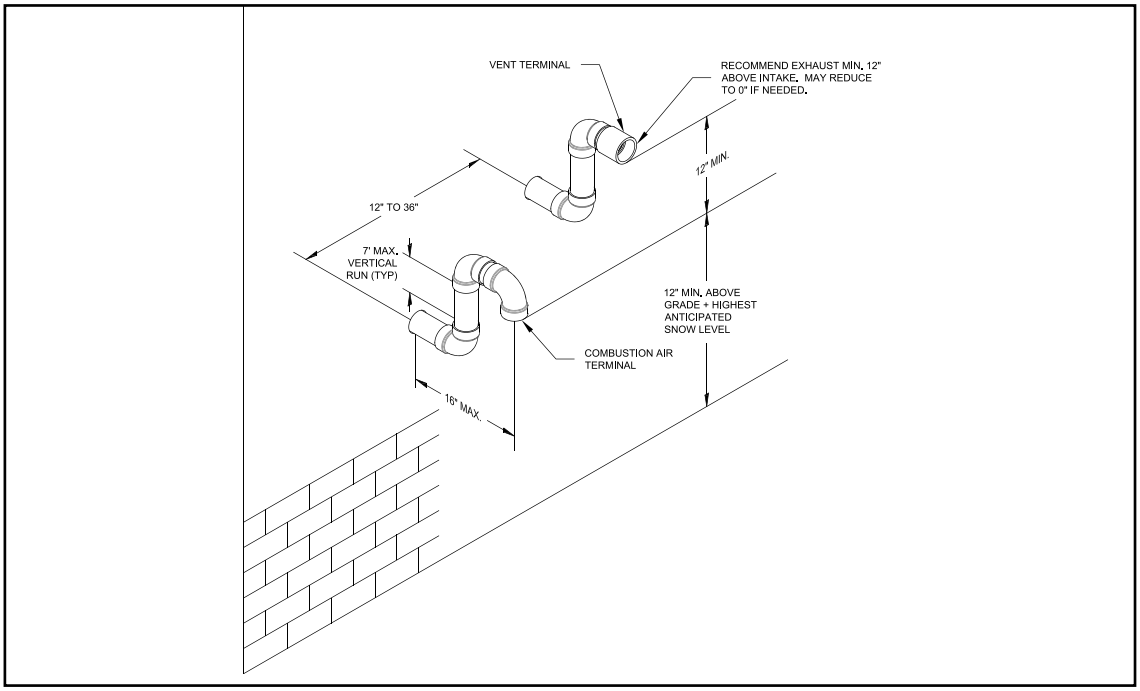

Figure 7.12: Snorkel Terminal Configuration (CPVC/PVC Vent Systems Only)

C. Design Requirements Unique to Vertical Venting Systems

Table 7.13a summarizes all vertical twin pipe vent options. Table 7.13.b summarizes vent options in which an abandoned B-vent chimney is used both as a chase for the vent pipe and as a conduit for combustion air.

In addition to the requirements in Part VII-A, observe the following design requirements:

1. Permitted Terminals for Vertical Venting

Terminal Option H: Fittings (Acceptable for Vent Options 10-17) – Vent terminates in a plain end (coupling for PVC, bell end for PolyPro, Polyflue and plain end pipe for InnoFlue). Intake terminates in a PVC 180 elbow pointing down (two sweep 90's may be substituted). Observe the clearances from the roof, and normal snow line on the roof, shown in Figures 7.15 and 7.17. The section of PolyPro, Polyflue or InnoFlue exposed to the outdoors must be UV resistant.

Use of rodent screens is generally recommended for both terminations. Two rodent screens are included within the available 2" and 3" vent kits or can be fabricated from 1/2" stainless steel mesh screen. Rodent screens ("bird guards") for PolyPro, Polyflue and InnoFlue are as follows:

Size/Vent System	Rodent Screen ("Bird Guard")
2" PolyPro	DuraVent # 2PPS-BG
3" PolyPro	DuraVent # 3PPS-BG
2" Polyflue	Selkirk # 2PF-HVST
3" Polyflue	Selkirk # 3PF-HVST
2" InnoFlue	Centrotherm # IASPP02
3" InnoFlue	Centrotherm # IASPP03

Terminal Option I: Ipex FGV Concentric Terminal (Acceptable for Vent Options 10 & 11) - This terminal is shown in Figure 7.16 and may be used with CPVC/PVC vent systems. Use a compatible roof flashing and storm collar in accordance with the Ipex instructions for this terminal. This terminal is available in various lengths and in both PVC and CPVC. Terminals acceptable for use with these vent options are as follows:

Ipex PN	FGV Concentric Terminal Description
196005	2 x 16" PVC
196105	2 x 28" PVC
196125	2 x 40" PVC
196006	3 x 20" PVC
196106	3 x 32" PVC
196116	3 x 44" PVC
197107	3 x 32" CPVC
197117	3 x 44" CPVC

See Part VII-E of this manual and the Ipex instructions provided with the terminal, for installation details.

Table 7.13a: Summary of Vertical Twin Pipe Venting Options

Option		10	11	12	13	14	15	16	17
Illustrated in Figure		7.15, 717	7.15, 7.17	7.17, 7.18	7.17, 7.18	7.17	7.17	7.17	7.17
Pipe Penetration through Structure	Vent	Roof	Roof	Roof	Roof	Roof	Roof	Roof	Roof
	Intake	Roof	Roof	Roof	Roof	Roof	Roof	Roof	Roof
Material	Vent	CPVC/ PVC (Note 2)	CPVC/ PVC (Note 2)	DuraVent PolyPro (Rigid)	DuraVent PolyPro (Rigid)	Selkirk Polyflue	Selkirk Polyflue	Centro-therm InnoFlue SW	Centro-therm InnoFlue SW
	Intake	PVC	PVC	PVC	PVC	PVC	PVC	PVC	PVC
Nominal Diameter	Vent	2"	3"	2"	3"	2"	3"	2"	3"
	Intake	2"	3"	2"	3"	2"	3"	2"	3"
Min Equivalent Vent Length:									
Model Sizes	85	30"	30"	30"	30"	30"	30"	30"	30"
	110	30"	30"	30"	30"	30"	30"	30"	30"
	155	Not Permitted	30"	Not Permitted	30"	Not Permitted	30"	Not Permitted	30"
	205		30"		30"		30"		30"
	270		30"		30"		30"		30"
Max Equivalent Vent Length (Note 1):									
Model Sizes	85	60ft	135ft	60ft	135ft	60ft	135ft	60ft	135ft
	110	60ft	135ft	60ft	135ft	60ft	135ft	60ft	135ft
	155	Not Permitted	135ft	Not Permitted	135ft	Not Permitted	135ft	Not Permitted	135ft
	205		135ft		135ft		135ft		135ft
	270		135ft		135ft		135ft		135ft
Terminal Option H (Fittings)	Vent	Coupling w/Screen	Coupling w/Screen	2PPS-12B or 2PPS-36B w/Screen	3PPS-12B or 3PPS-36B w/Screen	2PF-10UV or 2PF-39UV w/Screen	3PF-10UV or 3PF-39UV w/Screen	ISEP02 or ISEP0239 w/Screen	ISEP03 or ISEP0339 w/Screen
	Intake	180 Elbow w/Screen	180 Elbow w/Screen	180 Elbow w/Screen	180 Elbow w/Screen	180 Elbow w/Screen	180 Elbow w/Screen	180 Elbow w/Screen	180 Elbow w/Screen
Terminal Option I (Ipex FGV Concentric)		Ipex 196105 (Note 3)	Ipex 196006 (Note 3)	Not Permitted	Not Permitted	Not Permitted	Not Permitted	Not Permitted	Not Permitted
Terminal Option J (Diversitech CVENT Concentric)		CVENT-2	CVENT-3	Not Permitted	Not Permitted	Not Permitted	Not Permitted	Not Permitted	Not Permitted
Terminal Option K (DuraVent Vertical Concentric)		Not Permitted	Not Permitted	2PPS-VK	3PPS-VK	Not Permitted	Not Permitted	Not Permitted	Not Permitted

Notes:

1. Max vent lengths shown also apply to the intake. For example, Vent Option #1 may have up to 60ft of vent pipe and also up to 60 ft of intake pipe.
2. At least 30" of CPVC pipe, and at least one CPVC elbow, must be installed between the boiler's vent connection and PVC pipe. Downstream vent pipe can be PVC except as noted in text.
3. Ipex FGV Concentric Terminal available in various lengths and also CPVC (see text).

All vertical terminals require compatible roof flashing and storm collars.

Table 7.13b: Summary of Vertical "B-Vent Air Chase" Vent Options (B-Vent Chase MUST Be Sealed)

Option		18	19	20	21
Illustrated in Figure		7.19	7.19	7.20	7.20
Pipe Penetration Through Structure	Vent	Roof	Roof	Roof	Roof
	Intake	Roof	Roof	Roof	Roof
Material	Vent	DuraVent PolyPro (Rigid/ Flex)	DuraVent PolyPro (Rigid/ Flex)	Centrotherm InnoFlue SW/ Flex	Centrotherm InnoFlue SW/Flex
	Intake	B Vent/PVC	B Vent/PVC	B Vent/PVC	B Vent/PVC
Nominal Diameter	Vent	2"	3"	2"	3"
	Intake	2" or 3"	3"	2" or 3"	3"
Min B Vent ID		5"	6"	5"	6"
Min Equivalent Vent Length:					
Model Sizes	85	30"	30"	30"	30"
	110	30"	30"	30"	30"
	155	Not Permitted	30"	Not Permitted	30"
	205		30"		30"
	270		30"		30"
Max Equivalent Vent Length (Note 1):					
Model Sizes	85	60ft	135ft	60ft	135ft
	110	60ft	135ft	60ft	135ft
	155	Not Permitted	135ft	Not Permitted	135ft
	205		135ft		135ft
	270		135ft		135ft
Vent Manufacturer's PN for Flex Termination/Components Required		2PPS-VFT 2PPS-BV* 2PPS-FLEX**	3PPS-VFT 3PPS-BV* 3PPS-FLEX**	IFBK02**** IAWP02B	IFBK03**** IAWP03B

* Specify size of B vent (e.g. 2PPS-BV**6** is for use with 6" B vent)
** Specify length in feet.
**** Specify Flex length and B-vent diameter (e.g. IFBK02**2505** includes 25ft of flex and used with 5" B vent)

Note 1: Max vent lengths shown also apply to the intake. Flex vent reduces the maximum allowable vent length. See equivalent lengths for flex vent shown in Table 7.14 and sizing example on page 32.

NOTICE

Vertical venting and combustion air roof penetrations (where applicable) require the use of roof flashing and storm collar, which are not supplied with the boiler, to prevent moisture from entering the structure.

Terminal Option J: Diversitech Concentric Terminal (Acceptable for Vent Options 10 & 11) - This terminal is shown in Figure 7.16 and may be used with CPVC/PVC vent systems. See Part VII-E of this manual and the Diversitech instructions provided with the terminal, for installation details.

Terminal Option K: DuraVent PolyPro Concentric Terminal (Acceptable for Vent Options 12, 13) - This terminal is shown in Figure 7.18 and may be used with DuraVent 2" or 3" PolyPro vent systems. Use a compatible DuraVent roof flashing and storm collar in accordance with the DuraVent instructions for this terminal See Part VII-F of this manual and the DuraVent instructions provided with the terminal, for installation details.

2. Vertical Vent and Air Intake Location – Observe the following clearances from roof mounted terminals:

   - Bottom of air intake opening must be at least 12" above the normal snow line anticipated on the roof.
   - Exhaust opening must be at least 2ft above any portion of the roof or structure located within horizontally within 10ft.
   - For terminal option H, maintain at least 12" of vertical separation between the exhaust and intake opening as shown in Figure 7.15 and 7.17.

3. Requirements for B-Vent Air Chase Options – Observe the following additional requirements when using an abandoned B-vent chimney as an air chase as described in Options #18-21. Also refer to Figures 7.19 & 7.20.

   - B vent must be clean and in good condition.
   - Use of flex PolyPropylene outside of B-vent chimney is not permitted.
   - All joints and seams in the B-vent must be sealed with RTV. If these seams are not accessible, vent options 18-21 cannot be used while complying with the National Fuel Gas Code (as an alternative, the B-vent chimney can be used as a chase for the vent pipe while combustion air is piped from an outside wall - see Part VII-D for additional details).
   - All venting is PolyPropylene supplied by the vent manufacturer shown in Table 7.13b. The portion of this venting within the B–vent is flexible.
   - All flex pipe must be installed vertically. Up to two offsets (four bends) may be made in the vertical run of flex pipe. Bends used to make these offsets may not exceed 45 degrees.
   - Because the flex pipe is corrugated, it has a higher pressure drop than the rigid pipe used elsewhere in the vent system. Equivalent lengths for flex venting are shown in Table 7.14. Reduce the maximum allowable vent length shown in Table 7.13b by this equivalent length for each foot of flex pipe used, as well as for each elbow in addition to the first. The termination is not counted. If offsets (described above) are present, the equivalent length of the bends in these offsets can also be ignored.

Example: A 110MBH model is to be installed as using Vent Option 18 as shown in Figure 7.19. The following components are used:

Vent:
2" DuraVent Poly-Pro (Rigid) – 4ft
2" DuraVent Poly-Pro Flex – 20ft
Poly-Pro elbows – 2
DuraVent 2PPS-VFT Terminal (exhaust side)

Intake:
2" PVC – 6ft
2" PVC Sweep 90 – 3
Turn in B vent Tee
Straight B-vent (5" or larger) containing flex vent – 20ft
DuraVent 2PPS-VFT Terminal (intake side)

Vent Equivalent length – First elbow is ignored. The terminal is also ignored. From Table 7.14, the equivalent length of 2" DuraVent Poly-Pro Flex is 2.0ft. From Table 7.1 the equivalent length of the second 90 elbow is 4.5ft. The equivalent length of the vent system is therefore:

4 + 4.5 + (20 x 2.0) = 48.5ft.

Since Vent Option 18 shows a max vent length of 60ft, the planned vent length is OK.

Intake Equivalent length - First elbow and the turn in the B vent tee are ignored, leaving two sweep 90 elbows that must be counted. From Table 7.1, the equivalent length of each of these elbows is 2.6ft. From Table 7.14 the equivalent length of the B vent containing flex is 1.0ft. Equivalent length of the intake system is therefore:

(2 x 2.6) +6 +(20 x 1.0) = 31.2ft.

Since this is less than 60ft, the planned intake length is OK.

Table 7.14: Equivalent Length of Flex Pipe

	Equivalent Length (ft)
Flex Vent (1 ft):	
2" DuraVent PolyPro Flex	2.0 ft
2" Centrotherm InnoFlue Flex	2.0 ft
2" Selkirk Polyflue	2.0 ft
3" DuraVent PolyPro Flex	2.0 ft
3" Centrotherm InnoFlue Flex	2.3 ft
3" Selkirk Polyflue	2.3 ft
3" DuraVent FasNSeal Flex	1.0 ft
B-Vent Air Chase (1ft):	
2" Flex Vent in 5" (or larger) B-Vent	1.0 ft
3" Flex Vent in 6" (or larger) B-Vent	1.0 ft

Note: Up to four 45 degree bends may be made in flex pipe or air chase.
These bends are not counted when figuring equivalent length.

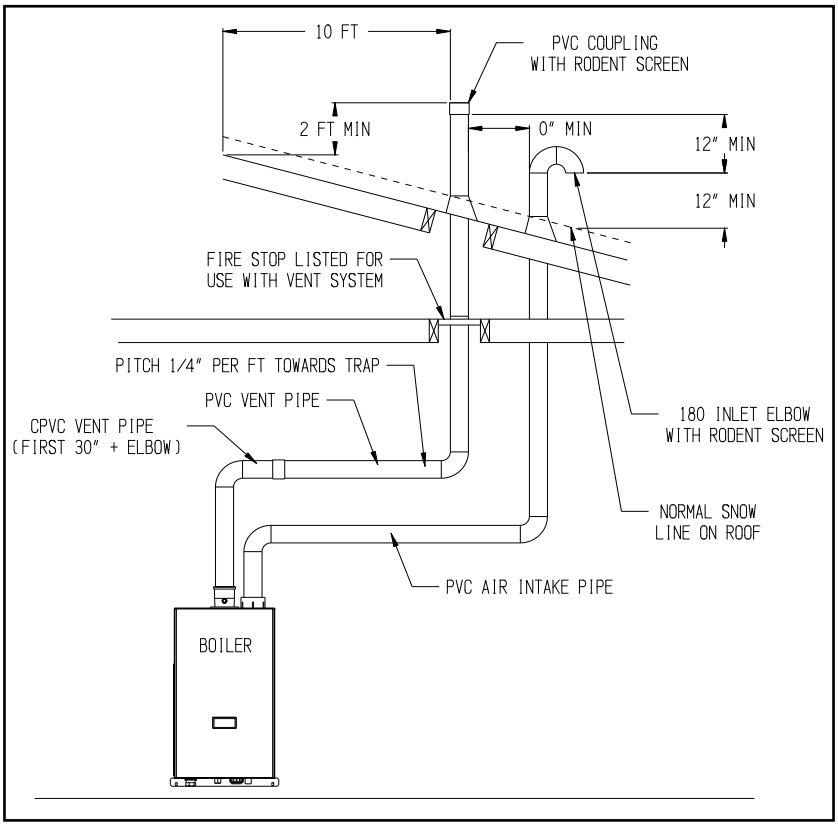

Figure 7.15: Vertical CPVC/PVC Venting (Vent Options 10 & 11, Terminal Option H)

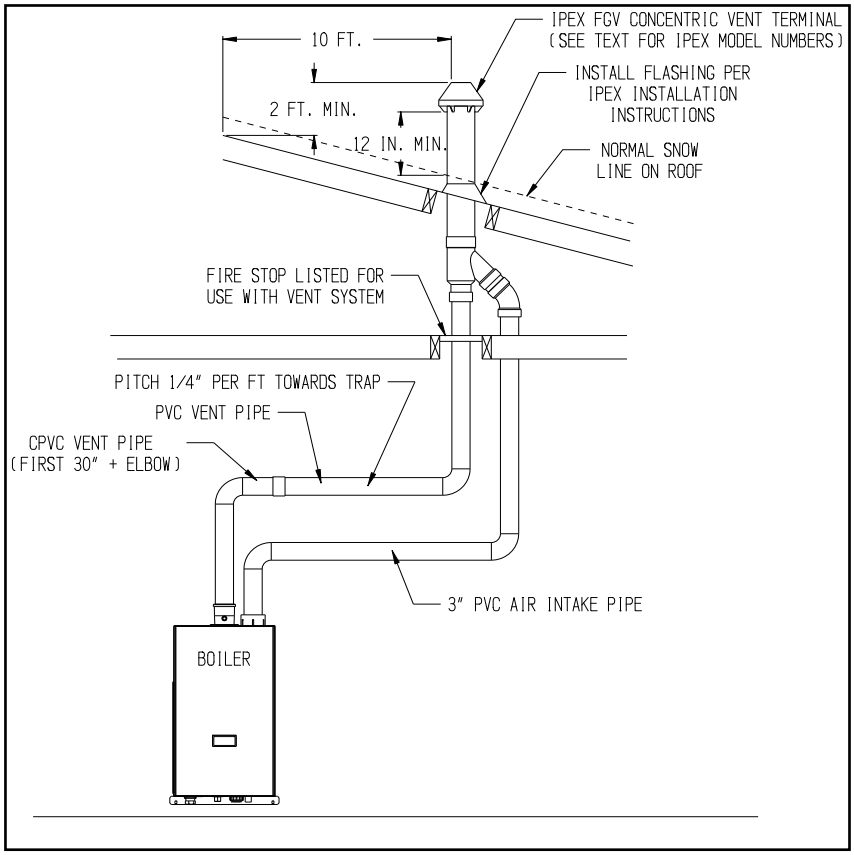

Figure 7.16: Vertical CPVC/PVC Venting with IPEX Concentric Vent Terminal (Vent Options #10 & 11, Terminal Option I, J)

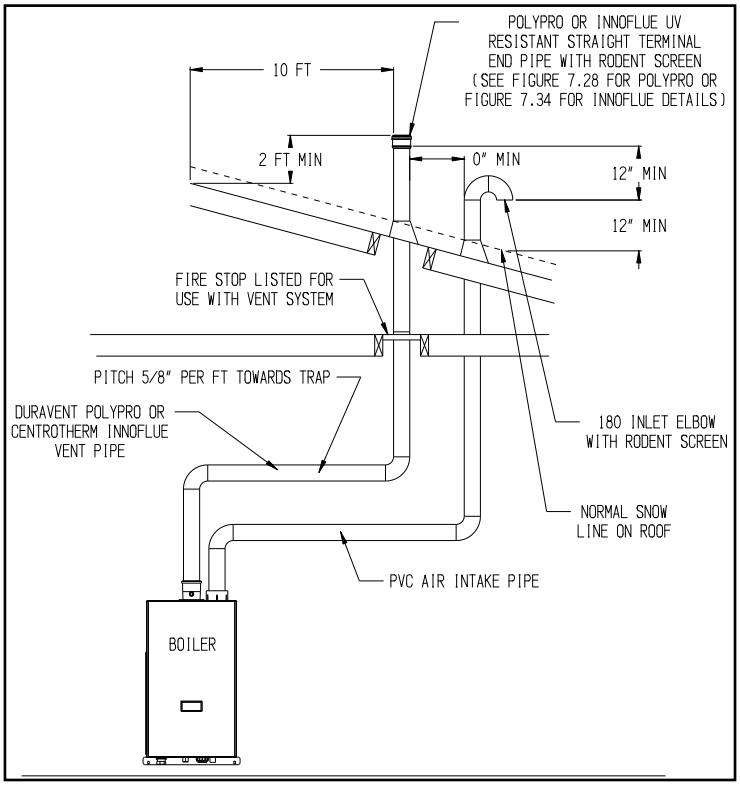

Figure 7.17: Duravent PolyPro, Selkirk Polyflue or Centrotherm InnoFlue Vertical Single Wall PP Venting (Vent Options #12-17, Terminal Option H)

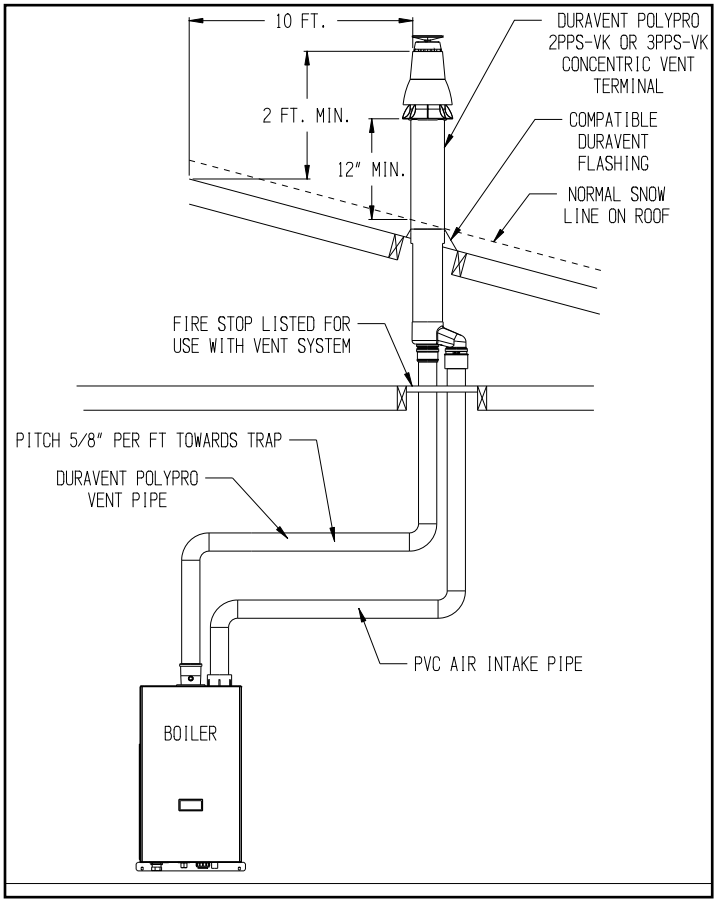

Figure 7.18: Duravent PolyPro Vertical Venting with Concentric Terminal (Vent Options #12 & 13, Terminal Option J)

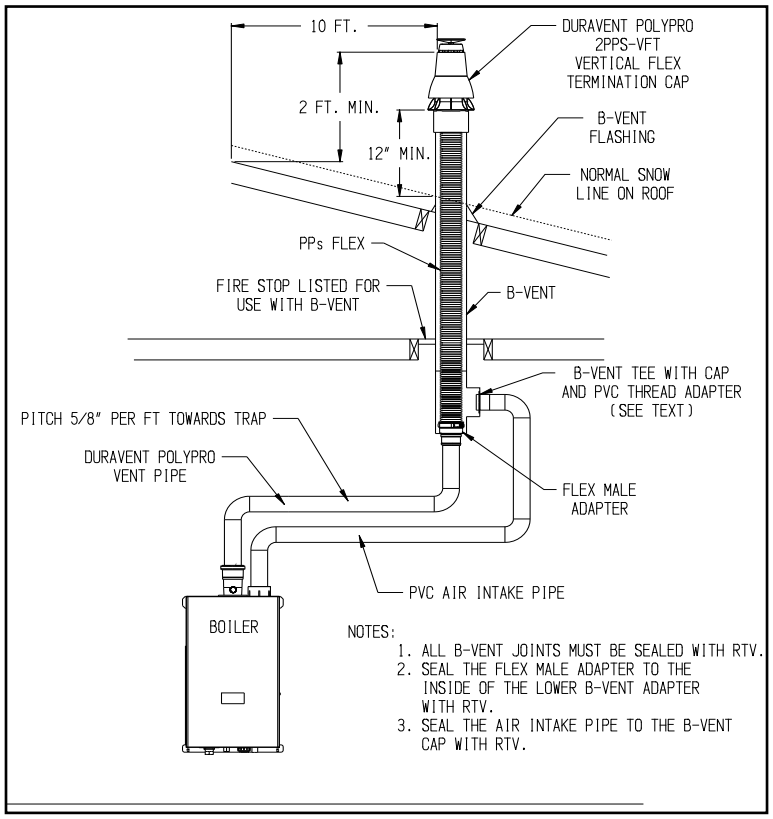

Figure 7.19: Duravent PolyPro B-Vent Air Chase System (Vent Options #18 & 19)

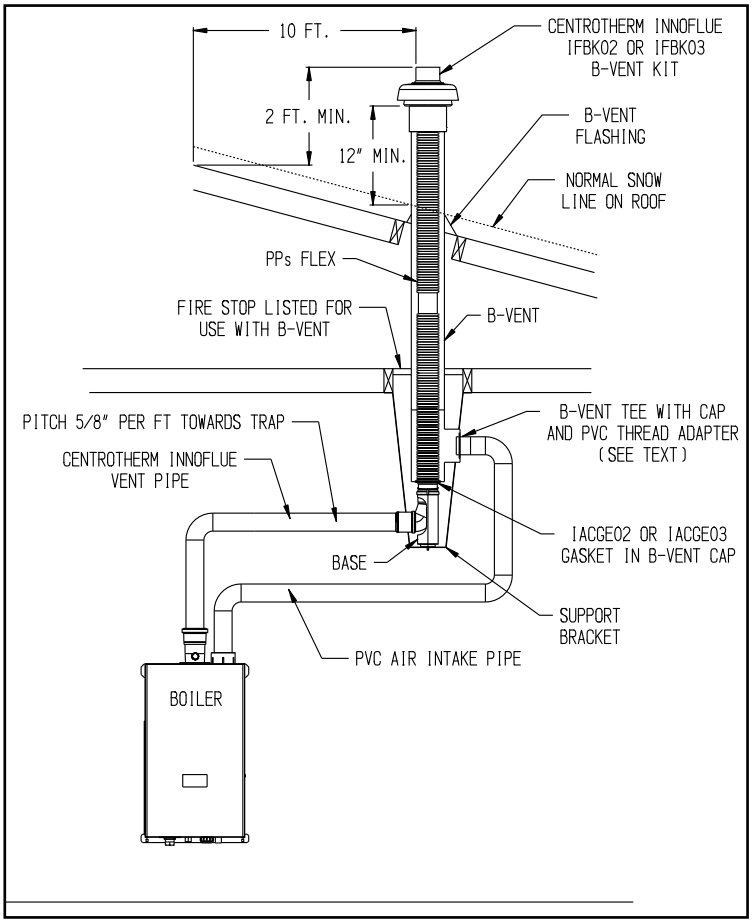

Figure 7.20: Centrotherm InnoFlue B-Vent Air Chase System (Vent Options #20 & 21)

D. Design Requirements Unique to Split Vent Systems

Table 7.21 summarizes all split vent options. Illustrations of split vent systems are shown in Figures 7.22, 7.23, and 7.24. In addition to the requirements in Part VII-A, observe the following design requirements:

1. Permitted Terminals for Split Venting:

   Rigid Vent Systems (Vent Options 25-32) – Vent terminates in a plain end (coupling for PVC, bell end for PolyPro, Polyflue, and plain end pipe for InnoFlue). Intake terminates in a PVC 90 sweep elbow pointing down. The section of PolyPro, Polyflue or InnoFlue exposed to the outdoors must be UV resistant.

   Use of a rodent screen is generally recommended for the vent termination. A rodent screen suitable for 3" PVC terminals is installed under the termination coupling as shown in Figure 7.27. Rodent screens ("bird guards") for PolyPro, Polyflue and InnoFlue are as follows:

Size/Vent System	Rodent Screen ("Bird Guard")
2" PolyPro	DuraVent # 2PPS-BG
3" PolyPro	DuraVent # 3PPS-BG
2" Polyflue	Selkirk #2PF-HVST
3" Polyflue	Selkirk #3PF-HVST
2" InnoFlue	Centrotherm # IASPP02
3" InnoFlue	Centrotherm # IASPP03

   Flex Vent Terminals (Options 33-39) – The flex vent kits shown for options 33-38 include vent terminals that must be installed in accordance with the vent manufacturer's instructions. Different terminals are used for Masonry and B-vent chimney chases.

   Air Intake Terminals (Vent Options 25-39) - All split venting options shown in Tables 7.21 terminate in a PVC 90 sweep elbow pointing down. Use of a rodent screen is generally recommended for the intake termination. A rodent screen suitable for 3" PVC terminals is installed under the intake termination elbow coupling as shown in Figure 7.27. If 2" CPVC is used, this screen can be cut to fit into the smaller fitting.

2. Vent Terminal Location – Observe the following clearances from roof mounted vent terminals (also see Figures 7.22, 7.23, or 7.24):

   - Bottom of terminal must be at least 12" above the normal snow line anticipated on the roof.
   - Exhaust opening must be at least 2ft above any portion of the roof or structure located within horizontally within 10ft.

3. Horizontal Air Intake Terminal Location - Observe the following limitations on the intake terminal location (also see Figures 7.22, 7.23, or 7.24):

   - The bottom of all terminals must be at least 12" above the normal snow line. In no case should they be less than 12" above grade level.
   - If possible, install the intake terminal on a wall away from the prevailing wind. Reliable operation of this boiler cannot be guaranteed if the intake terminal is subjected to winds in excess of 40 mph.
   - Air intake terminal must not terminate in areas that might contain combustion air contaminates, such as near swimming pools. See WARNING on page 15.

4. Use of abandoned chimneys as a vent chase (Options 33-38) – Vent options 33-38 permit flexible PolyPropylene venting to be routed to the roof using an abandoned masonry or B- vent chimney. In these applications combustion air is drawn horizontally from a wall terminal. See Figure 7.23 or 7.24. When using one of these vent options, observe the following requirements:

   - When a masonry chimney containing multiple flues is used as a chase, ALL flues must be abandoned (Figure 7.26).
   - Masonry or B vent chimney used as a chase must be structurally sound.
   - Use of flex PolyPropylene outside of a masonry or B-vent chimney is not permitted unless allowed by the vent manufacturer and permitted by local codes.
   - All venting is PolyPropylene supplied by the vent manufacturer shown in Table 7.21. The portion of this venting within the masonry or B–vent chimney is flexible.
   - All flex pipe must be installed vertically. Up to two offsets (four bends) may be made in the vertical run of flex pipe. Bends used to make these offsets may not exceed 45 degrees (Figure 7.24b).
   - Because the flex pipe is corrugated, it has a higher pressure drop than the rigid pipe used elsewhere in the vent system. Equivalent lengths for flex venting are shown in Table 7.14. Reduce the maximum allowable vent length shown in Table 7.21 by this equivalent length for each foot of flex pipe used, as well as for each elbow in addition to the first. The first elbow and termination are not counted. If offsets (described above) are present, the equivalent length of the bends in these offsets can also be ignored.

Example: A 110MBH model is to be installed as using Vent Option 34 in a masonry chimney as shown in Figure 7.23. The following components are used:

Vent:
3" DuraVent Poly-Pro (Rigid) – 4ft
3" DuraVent Poly-Pro Flex – 30ft
Poly-Pro elbows – 2 (one at base of chimney and one above boiler)
DuraVent 3PPS-FK Terminal

Intake:
3" PVC – 6ft
3" PVC Sweep 90 – 2 (one above the boiler and one as an intake terminal)

Vent Equivalent length – First elbow is ignored. The terminal is also ignored. From Table 7.14, the equivalent length of 3" DuraVent Poly-Pro Flex is 2.0ft. From Table 7.1 the equivalent length of the second 90 elbow is 8.7ft. The equivalent length of the vent system is therefore:

4 + 8.7 + (30 x 2.0) = 72.7ft.

Since Vent Option 34 shows a max vent length of 135ft, the planned vent length of OK.

Intake Equivalent length - First elbow and termination elbow are ignored, leaving just the straight pipe. Equivalent length of the intake system is therefore 6ft. Since this is less than 135ft, the planned intake length is OK.

5. Use of abandoned chimney as vent chase for flexible Stainless Steel Venting Option 39 - Vent Option 39 permits flexible Stainless Steel venting to be routed to the roof using an abandoned masonry type chimney. In this application, combustions air is drawn horizontally from a wall terminal. See Figure 7.25a. When using this, observe the following requirements:

    - When a masonry chimney containing multiple flues is used as a chase, the flexible stainless vent installation is permitted through an adjacent UNUSED flue providing local authority having jurisdiction approves such installation. (Figure 25b)
    - Masonry chimney used as a chase must be structurally sound and in good repair.
    - All venting is stainless steel supplied by the vent manufacturer shown in Table 7.21. The portion of this venting within the masonry chimney is flexible.
    - When flexible stainless steel is used for combustion product venting, it must be installed at vertical or near vertical plane. This will insure proper condensate flow back to the boiler. (Figure 7.25a)

⚠ WARNING

Asphyxiation Hazard. Flexible polypropylene vent must be installed only in an UNUSED chimney, A chimney flue is considered UNUSED when it is not being used for any appliance venting. If chimney is a multiple flue type where one of the multiple flues is being used for an appliance venting, the flexible polypropylene vent installation is not permitted through any of the adjacent flues.

Asphyxiation Hazard. Flexible stainless steel vent must be installed only in an UNUSED chimney flue. A chimney flue is considered UNUSED when it is not being used for any appliance venting. If chimney is a multiple flue type where one of the multiple flues is being used for an appliance venting, the flexible stainless vent installation is permitted through an adjacent, unused flue providing a local authority having jurisdiction approves such installation.

Table 7.21: Summary of Split Vent System Options

Option #		**25**	**26**	**27**	**28**	**29**	**30**
Illustrated in Figure		7.22	7.22	7.22	7.22	7.22	7.22
Pipe Penetration Through Structure	Vent	Roof	Roof	Roof	Roof	Roof	Roof
	Intake	Wall	Wall	Wall	Wall	Wall	Wall
Material	Vent	CPVC/PVC (Note 2)	CPVC/PVC (Note 2)	DuraVent PolyPro (Ridged)	DuraVent PolyPro (Ridged)	Selkirk Polyflue	Selkirk Polyflue
	Intake	PVC	PVC	PVC	PVC	PVC	PVC
Nominal Diameter	Vent	2"	3"	2"	3"	2"	3"
	Intake	2" or 3"	3"	2" or 3"	3"	2" or 3"	3"
Min Equivalent Vent Length:							
Model Sizes	85	30"	30"	30"	30"	30"	30"
	110	30"	30"	30"	30"	30"	30"
	155	Not Permitted	30"	Not Permitted	30"	Not Permitted	30"
	205		30"		30"		30"
	270		30"		30"		30"
Max Equivalent Vent Length (Note 1):							
Model Sizes	85	60ft	135ft	60ft	135ft	60ft	135ft
	110	60ft	135ft	60ft	135ft	60ft	135ft
	155	Not Permitted	135ft	Not Permitted	135ft	Not Permitted	135ft
	205		135ft		135ft		135ft
	270		135ft		135ft		135ft
Rigid Vent Terminals	Vent	Coupling w/Screen	Coupling w/Screen	2PPS-12B or 2PPS-36B w/Screen	3PPS-12B or 3PPS-36B w/Screen	2PF-10UV or 2PF-39UV w/Screen	3PF-10UV or 3PF-39UV w/Screen
	Intake	90 Elbow w/Screen	90 Elbow w/Screen	90 Elbow w/Screen	90 Elbow w/Screen	90 Elbow w/Screen	90 Elbow w/Screen
Flex Termination & Components (Masonry Chimney Chase) (Note 3)	Vent	Not Permitted					
	Intake						
Flex Termination & Components (B-Vent Chimney Chase)	Vent	Not Permitted					
	Intake						

* Specify size of B vent (e.g. 2PPS-BV**6** is for use with 6" B vent).
** Specify length in feet.
**** Specify Flex length and B vent diameter (e.g. IFBK02**2505** includes 25ft of flex and used with 5" B vent).

Note 1: Max vent lengths shown also apply to the intake. Flex vent reduces the maximum allowable vent length. See equivalent lengths for flex vent shown in Figure 7.14 and sizing example on page 32.
Note 2: At least 30" of CPVC pipe, and at least one CPVC elbow, must be installed between the boiler's vent connection and PVC pipe.
Note 3: If masonry chimney contains flues in addition to that being used for chase, **ALL** must be unused.
Note 4: See vent manufacturer's installation manual for gaskets, spacers and other required vent components.

All vertical terminals require compatible roof flashing and storm collars.

Table 7.21: Summary of Split Vent System Options (continued)

Option #		**31**	**32**	**33**	**34**
Illustrated in Figure		7.22	7.22	7.23, 7.24	7.23, 7.24
Pipe Penetration Through Structure	Vent	Roof	Roof	Roof	Roof
	Intake	Wall	Wall	Wall	Wall
Material	Vent	Centrotherm InnoFlue SW	Centrotherm InnoFlue SW	DuraVent PolyPro (Rigid/Flex)	DuraVent PolyPro (Rigid/Flex)
	Intake	PVC	PVC	PVC	PVC
Nominal Diameter	Vent	2"	3"	2"	3"
	Intake	2" or 3"	3"	2" or 3"	3"
Min Equivalent Vent Length:					
Model Sizes	85	30"	30"	30"	30"
	110	30"	30"	30"	30"
	155	Not Permitted	30"	Not Permitted	30"
	205		30"		30"
	270		36"		30"
Max Equivalent Vent Length (Note 1):					
Model Sizes	85	60ft	135ft	60ft	135ft
	110	60ft	135ft	60ft	135ft
	155	Not Permitted	135ft	Not Permitted	135ft
	205		135ft		135ft
	270		135ft		135ft
Rigid Vent Terminals	Vent	ISEP02 or ISEP0239 w/ Screen	ISEP03 or ISEP0339 w/Screen	Not Permitted	
	Intake	90 Elbow w/Screen	90 Elbow w/Screen		
Flex Termination & Components (Masonry Chimney Chase) (Note 3)	Vent	Not Permitted		2PPS-FK 2PPS-FLEX**	3PPS-FK 3PPS-FLEX**
	Intake			90 Elbow w/Screen	90 Elbow w/Screen
Flex Termination & Components (B-Vent Chimney Chase)	Vent	Not Permitted		2PPS-VFT 2PPS-BF* 2PPS-FLEX**	3PPS-VFT 3PPS-BF* 3PPS-FLEX**
	Intake			90 Elbow w/Screen	90 Elbow w/Screen

* Specify size of B vent (e.g. 2PPS-BV**6** is for use with 6" B vent).
** Specify length in feet.
**** Specify Flex length and B vent diameter (e.g. IFBK02**2505** includes 25ft of flex and used with 5" B vent).

Note 1: Max vent lengths shown also apply to the intake. Flex vent reduces the maximum allowable vent length. See equivalent lengths for flex vent shown in Figure 7.14 and sizing example on page 32.
Note 2: At least 30" of CPVC pipe, and at least one CPVC elbow, must be installed between the boiler's vent connection and PVC pipe.
Note 3: If masonry chimney contains flues in addition to that being used for chase, **ALL** must be unused.
Note 4: See vent manufacturer's installation manual for gaskets, spacers and other required vent components.

All vertical terminals require compatible roof flashing and storm collars.

Option #		**35**	**36**	**37**	**38**	**39**
Illustrated in Figure		7.23, 7.24	7.23, 7.24	7.23, 7.24	7.23, 7.24	7.23, 7.24
Pipe Penetration Through Structure	Vent	Roof	Roof	Roof	Roof	Roof
	Intake	Wall	Wall	Wall	Wall	Wall
Material	Vent	Selkirk Polyflue (Rigid/ Flex)	Selkirk Polyflue (Rigid/ Flex)	Centrotherm InnoFlue (Rigid/Flex)	Centrotherm InnoFlue (Rigid/Flex)	DuraVent FasNSeal Flex
	Intake	PVC	PVC	PVC	PVC	Stainless Steel
Nominal Diameter	Vent	2"	3"	2"	3"	3"
	Intake	2" or 3"	3"	2" or 3"	3"	3"
2" or 3"Min Equivalent Vent Length:						
Model Sizes	85	30"	30"	30"	30"	30"
	110	30"	30"	30"	30"	30"
	155	Not Permitted	30"	Not Permitted	30"	30"
	205		30"		30"	30"
	270		30"		30"	30"
Max Equivalent Vent Length (Note 1):						
Model Sizes	85	60ft	135ft	60ft	135ft	135ft
	110	60ft	135ft	60ft	135ft	135ft
	155	Not Permitted	135ft	Not Permitted	135ft	135ft
	205		135ft		135ft	135ft
	270		135ft		135ft	135ft
Rigid Vent Terminals	Vent	Not Permitted				
	Intake					
Flex Termination & Components (Masonry Chimney Chase) (Note 3)	Vent	2PF-FLEX-KIT 2PF-FLEX	3PF-FLEX-KIT 3PF-FLEX	IFCK02**	IFCK03**	3FS Flex-** FS Flex RC3
	Intake	90 elbow w/ screen	90 elbow w/ screen	90 elbow w/ screen	90 elbow w/ screen	90 elbow w/ screen
Flex Termination & Components (B-Vent Chimney Chase)	Vent	2PF-10UV or 2PF-39UV w/ Screen 2PF-BVSC	3PF-10UV OR 3PF-39UV w/ Screen 3PF-BVSC (Note 4)	IFBK02****	IFBK03****	Not Permitted
	Intake	90 elbow w/ screen	90 elbow w/ screen	90 elbow w/ screen	90 elbow w/ screen	

* Specify size of B vent (e.g. 2PPS-BV**6** is for use with 6" B vent).
** Specify length in feet.
**** Specify Flex length and B vent diameter (e.g. IFBK02**2505** includes 25ft of flex and used with 5" B vent).

Note 1: Max vent lengths shown also apply to the intake. Flex vent reduces the maximum allowable vent length. See equivalent lengths for flex vent shown in Figure 7.14 and sizing example on page 32.
Note 2: At least 30" of CPVC pipe, and at least one CPVC elbow, must be installed between the boiler's vent connection and PVC pipe.
Note 3: If masonry chimney contains flues in addition to that being used for chase, **ALL** must be unused.
Note 4: See vent manufacturer's installation manual for gaskets, spacers and other required vent components.

All vertical terminals require compatible roof flashing and storm collars.

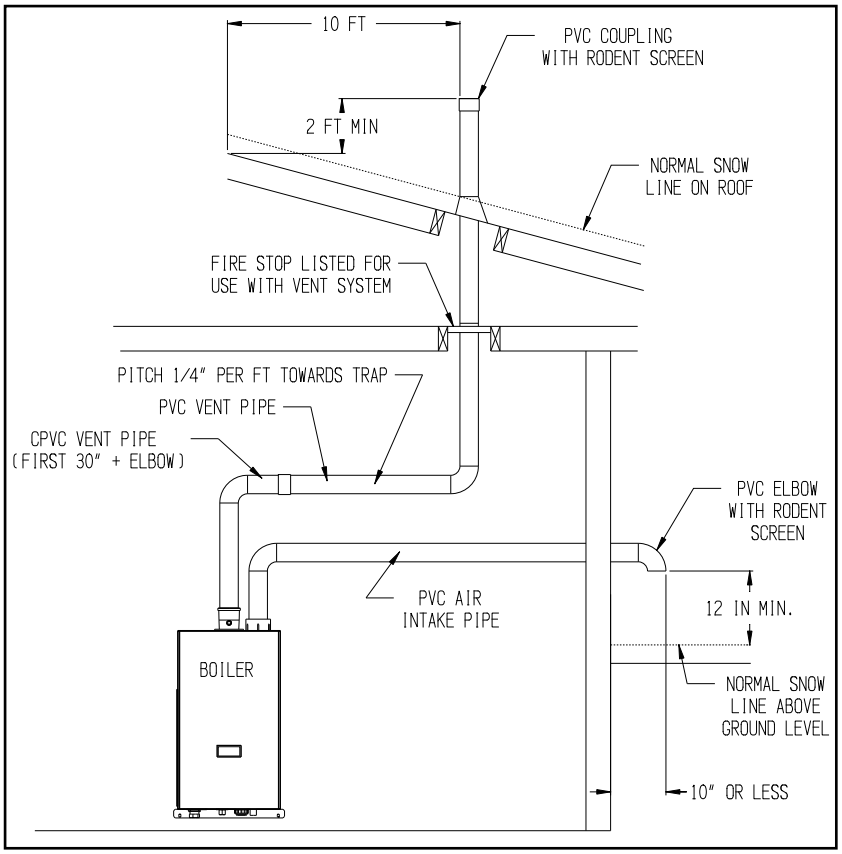

Figure 7.22: Split Rigid Vent System (Vent Options 25-32)

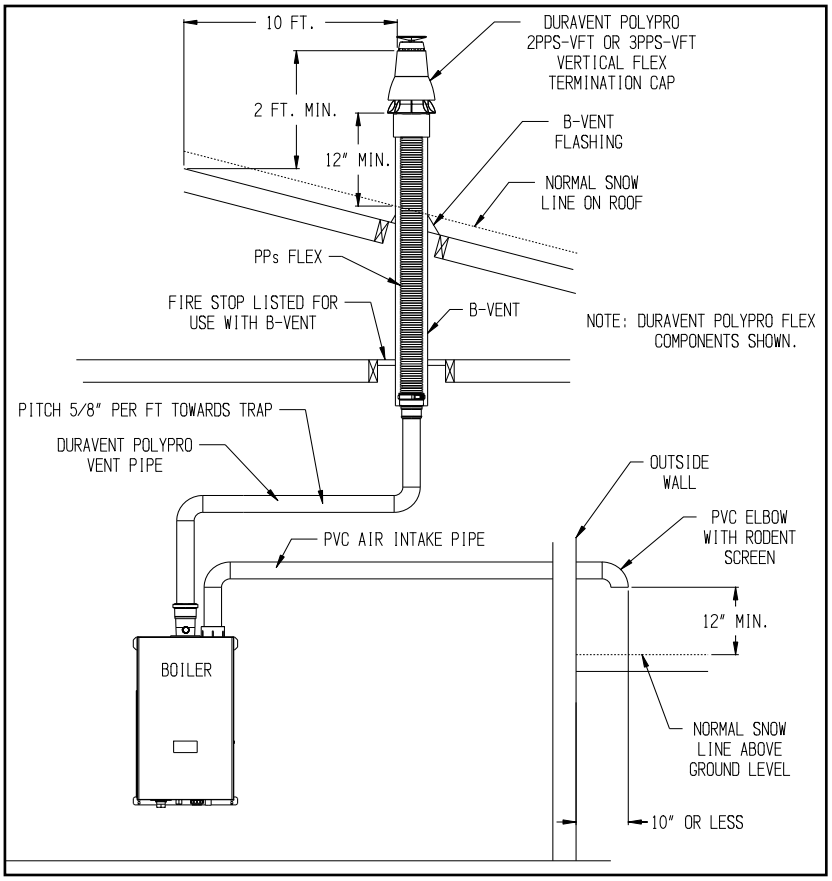

Figure 7.23: Split Vent System (Flex in B-Vent Chase) Vent Options 33-38)

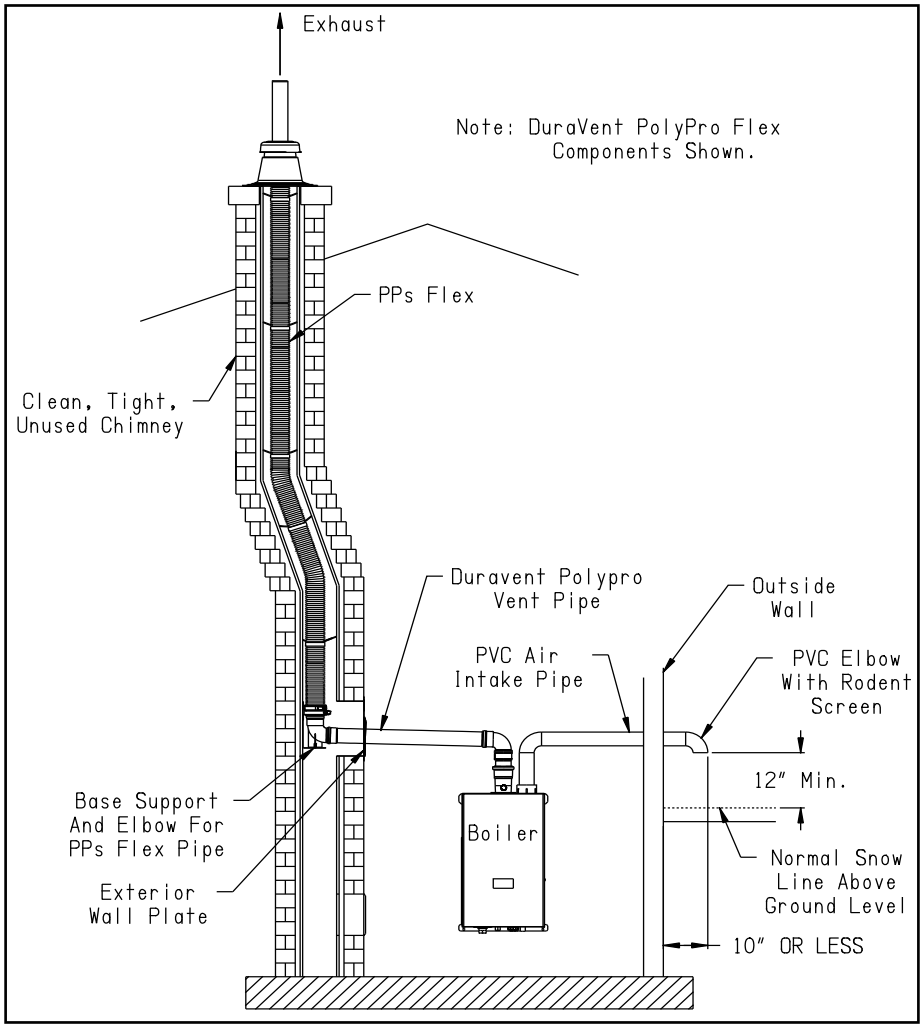

Figure 7.24a: Split Vent System (PP Flex in Abandoned Masonry Chimney) (Vent Options 33-38)

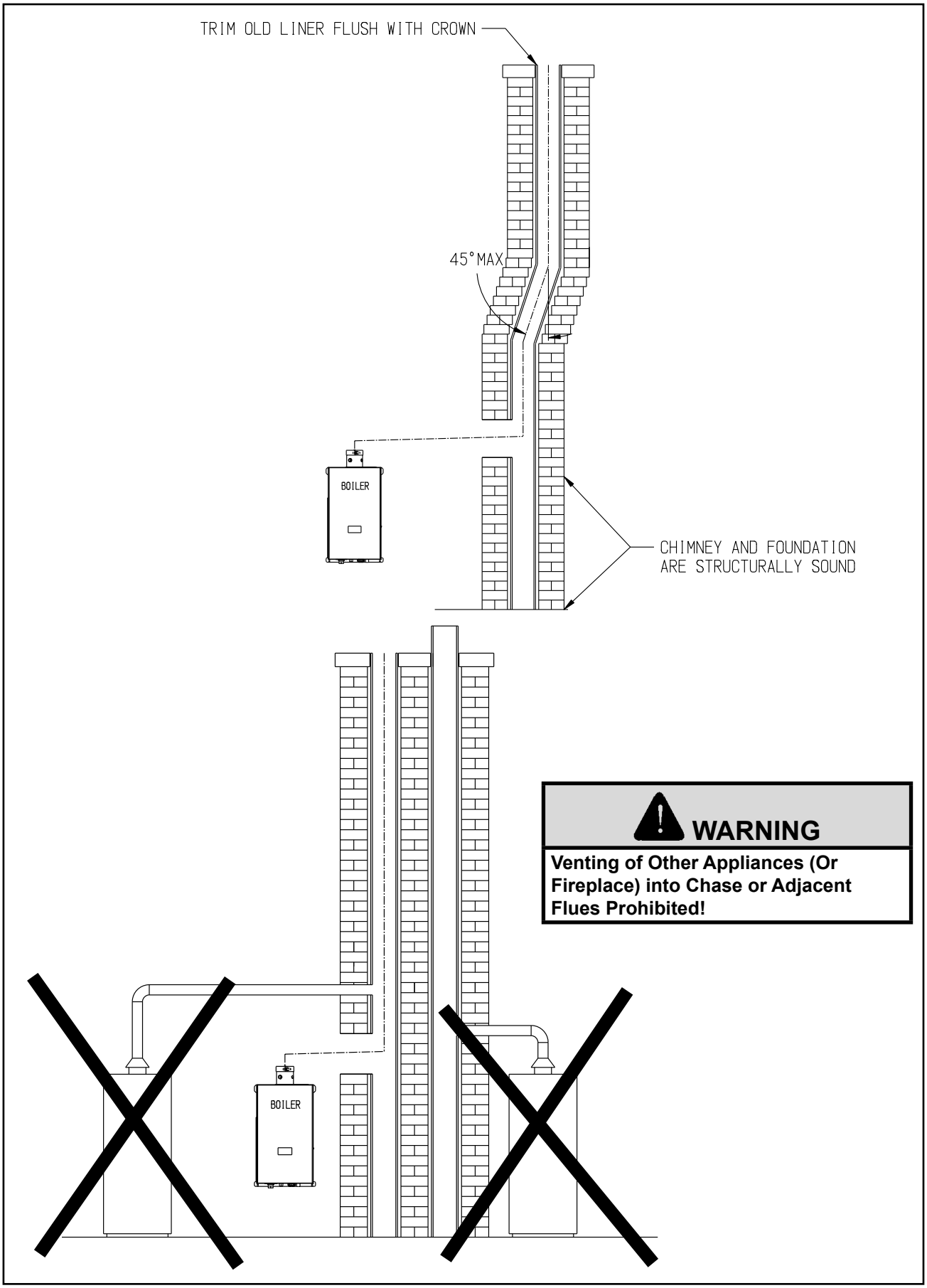

Figure 7.24b: Flexible PP Masonry Chimney Chase Requirements

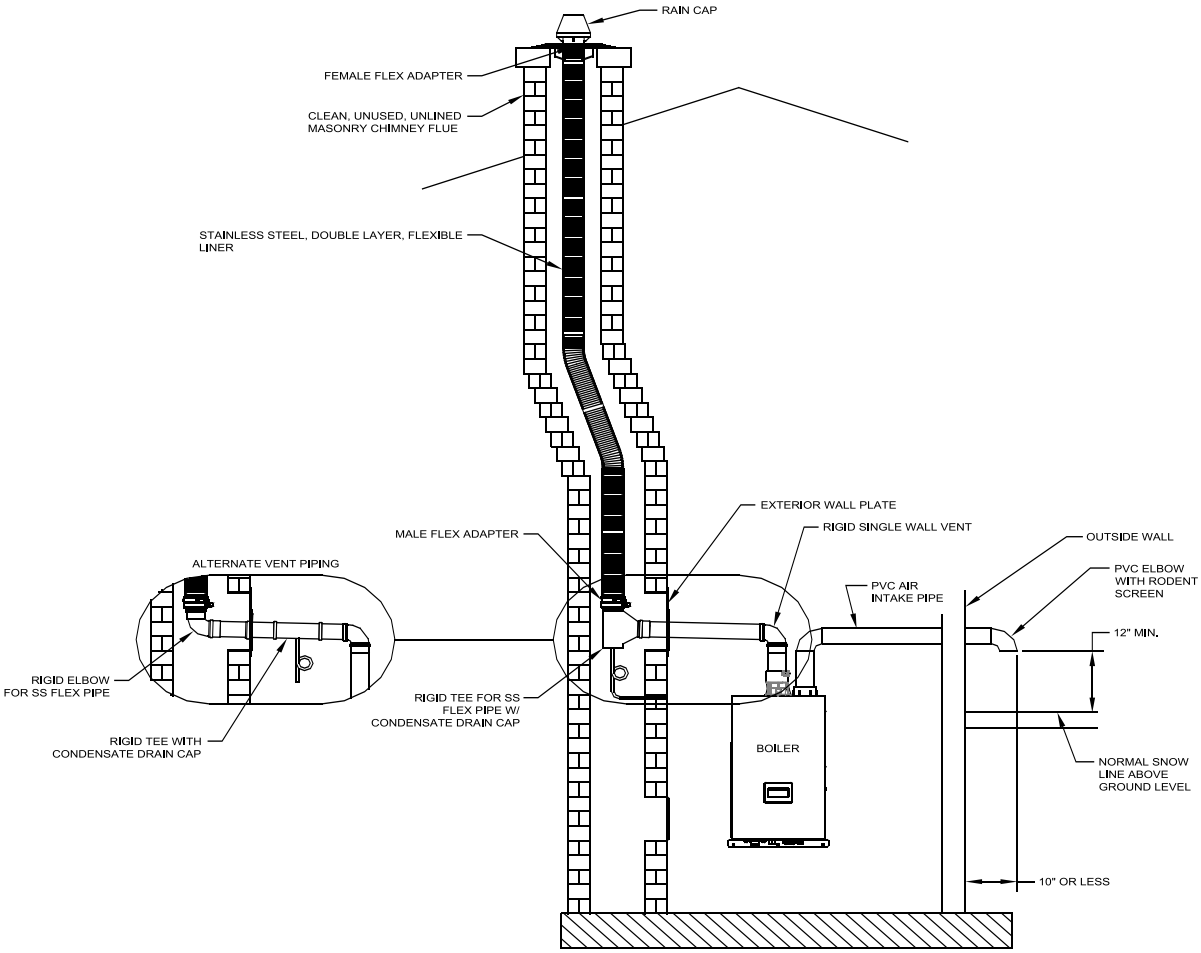

Figure 7.25a: Split Vent System (SS Flex in Abandoned Masonry Chimney) (Vent Option 39)

WARNING

Venting of Other Appliances (Or Fireplace) into Chase Prohibited!

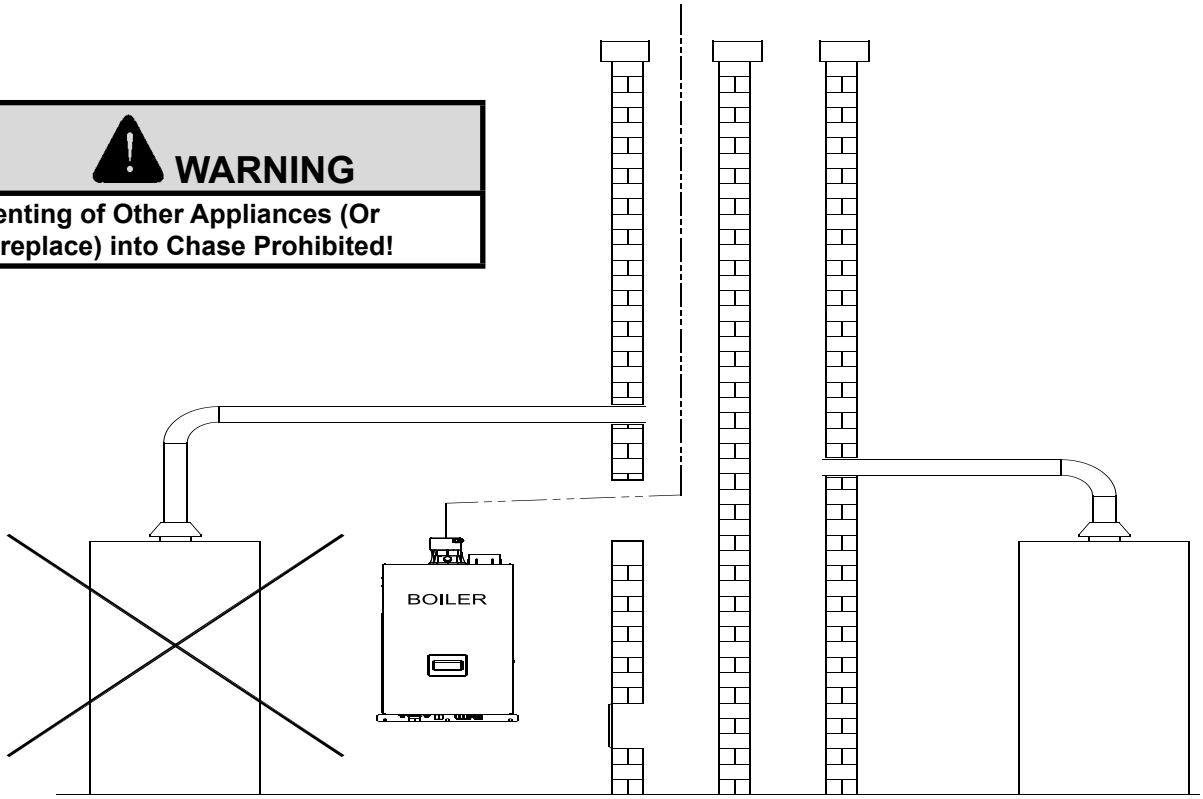

Figure 7.25b: Flexible SS Masonry Chimney Chase Requirements

E. Assembly of CPVC/PVC Vent Systems

WARNING

Failure to follow this warning could result in asphyxiation and/or carbon monoxide poisoning. Correct venting material and installation is required for proper vent operation. PVC Vent Systems must include at least 30 inches of CPVC and one CPVC elbow between the boiler and PVC vent piping. See this Section, VII. Venting for complete information.

Use CPVC vent components within any interior space where air cannot circulate freely, including through vertical or horizontal chase ways, inside a stud wall, in closets and through wall penetrations.

Asphyxiation Hazard. Failure to follow these instructions could cause products of combustion to enter the building, resulting in severe property damage, personal injury or death.

The use of cellular core PVC (ASTM F891), cellular core CPVC or Radel (polyphenolsulfone is prohibited.

All condensate that forms in the vent must be able to drain back to the boiler.

Never leave the boiler in operation without the gas sample cap in place (Figure 7.26).

1. Assemble the vent system, starting at the boiler:
   a. If 3" PVC is to be used for venting, at least one 3" CPVC elbow and at least one 30" straight section of CPVC must be used before transitioning to PVC. If necessary the 30" straight section of CPVC may be cut in any location and the CPVC elbow inserted between the two resulting segments. 3" PVC Sidewall Vent Kit, P/N 107039-02, is available and includes 30" CPVC starter and elbow, PVC terminations, and screens.
   b. When cutting CPVC or PVC pipe, use a miter saw or a saw designed to cut PVC pipe. Use a miter box or other method to cut pipe squarely. De-burr both the inside and outside of the cut end.
   c. Dry fit all vent components before assembly.
   d. The vent adaptor has three different inside diameters. The larger (upper) inside diameter accepts 3" CPVC pipe and is used in this application (the middle inside diameter accepts 3" nominal PolyPro, Polyflue or InnoFlue). Lubricate the gaskets in the vent adaptor with water and insert the first piece of 3" CPVC into the vent adaptor until it bottoms out. Tighten band clamp on vent adapter to secure vent pipe.
   e. If 2" CPVC is to be used for the vent system, reduce the first piece of 3" CPVC installed in Step (b) to 2" CPVC using a CPVC reducing coupling or elbow. Otherwise assemble the 3" CPVC elbow and the remainder of the 30" CPVC piping before transitioning to PVC. If 3" PVC is used, the first piece of PVC will either be connected to the CPVC elbow or the end of a section of CPVC vent pipe. In the latter case, a PVC coupling may be used to connect the first piece of PVC to the last piece of CPVC. 2" PVC Sidewall Vent Kit, P/N 107039-01, is available and includes 30" CPVC starter and elbow, 2" x 3" reducing bushings, PVC terminations, and screens.
   f. Clean all CPVC and PVC components with the appropriate primer before cementing. Cement the vent system together, starting at the boiler and following the instructions provided on the cans of cement and primer. Use a field supplied cement and primer that is listed for use with the materials being joined (CPVC and/or PVC). The following, or its equivalent, may be used to join CPVC to PVC:
      - IPS Corporation #P-70 Primer
      - IPS Corporation #790 Multi-Purpose Solvent Cement

      Always use primer on both the pipe and fitting before applying the cement. Assemble the pipe in accordance with the instructions on the cans of primer and cement.
   g. Assemble the rest of the vent system, being sure to pitch horizontal sections back towards the boiler 1/4"/ft. Support the vent at intervals not exceeding 4 ft.

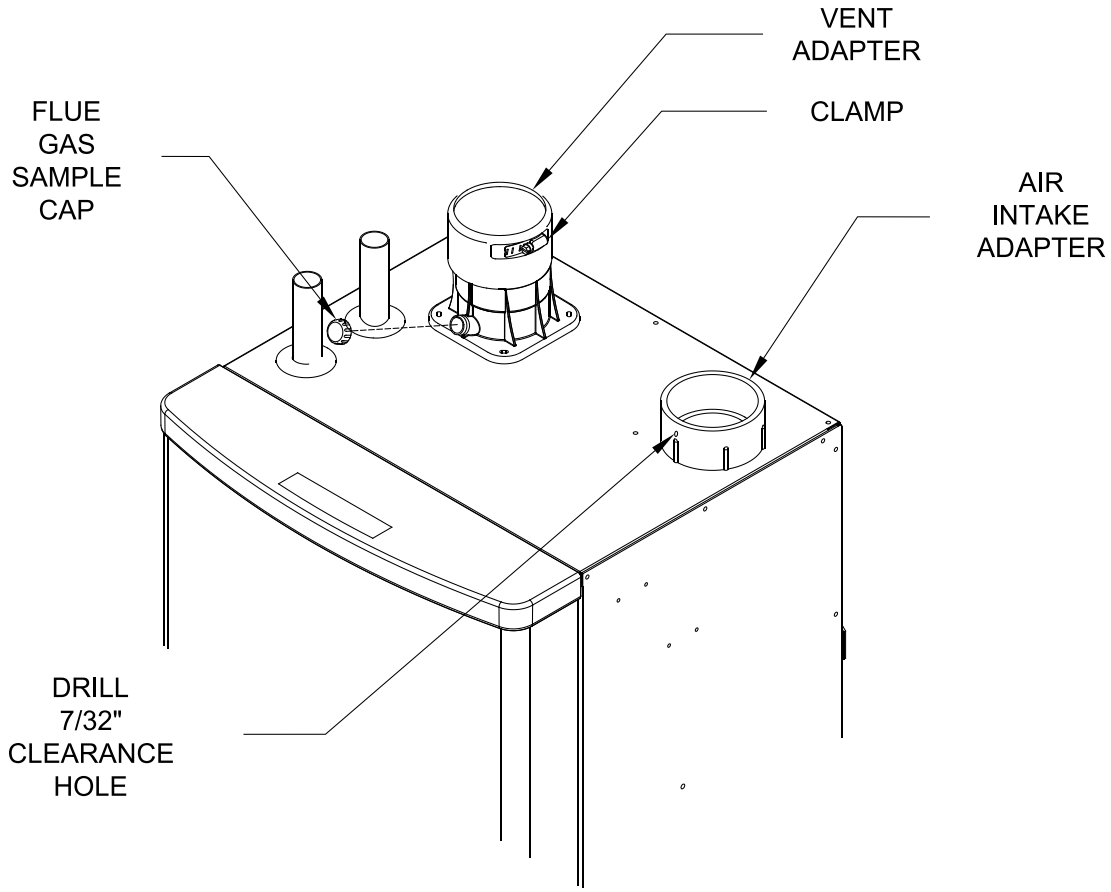

Figure 7.26: Vent Connections and Flue Gas Sample Cap Location

h. Maintain the clearances from the vent pipe outlined in Part VII-A of this manual. If exiting the exterior wall using PVC pipe, use half of an appropriately sized wall thimble (or a sheet metal plate) on the exterior of the building, to provide a weather tight seal while maintaining the proper clearance in the wall penetration. Seal the joint between the pipe and the wall plate using RTV applied on the exterior side of the wall. This sealant must not restrain the expansion of the vent pipe.

2. Installation of Air Intake System - Start assembly of the PVC air intake system at the boiler. Assembly of the air intake system is done in the same manner as the vent system except as follows:
   a. Drill a 7/32" clearance hole into the front side of the air intake adapter. Insert the first piece of PVC air intake pipe into the air intake connection and drill a 1/8" tap hole into the PVC which lines up with the 7/32" clearance hole and secure them together with a #10 x 1" sheet metal screw. Seal the joint between the intake pipe and the adaptor with RTV.
   b. All intake piping may be PVC.
   c. There is a 0" minimum clearance between the air intake piping and all types of construction.
   d. To the extent possible, pitch horizontal air intake piping towards the outdoors.

3. Installation of Horizontal Fitting Terminals (Terminal Option A):
   a. See Figure 7.27 for proper orientation of twin pipe horizontal terminals. Outer edge of both terminals must be within 10" from wall surface. (Figure 7.6)
   b. If desired, the terminals can be attached to the end of the vent and/or intake pipes with field supplied stainless steel screws so that they can be later removed for cleaning and inspection. If this is done, drill a clearance hole in the coupling or elbow and a tap hole in the end of the vent/intake pipes to accept these screws.
   c. If these terminals are installed on snorkels, assemble the snorkels as shown in Figure 7.12. Brace the vertical run of piping on the building exterior as required.

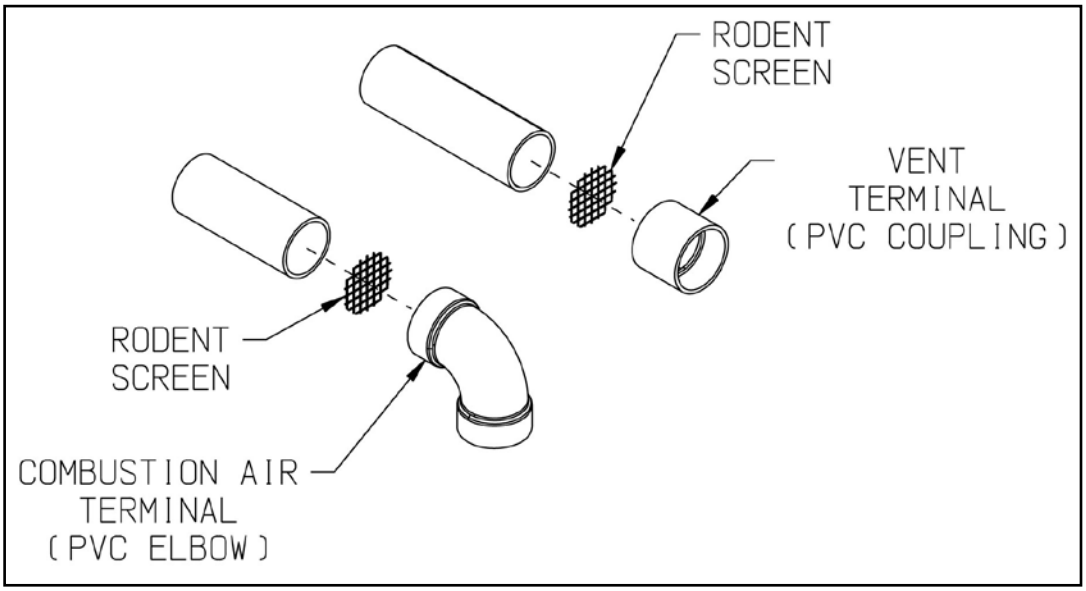

Figure 7.27: Installation of Standard Horizontal Terminals

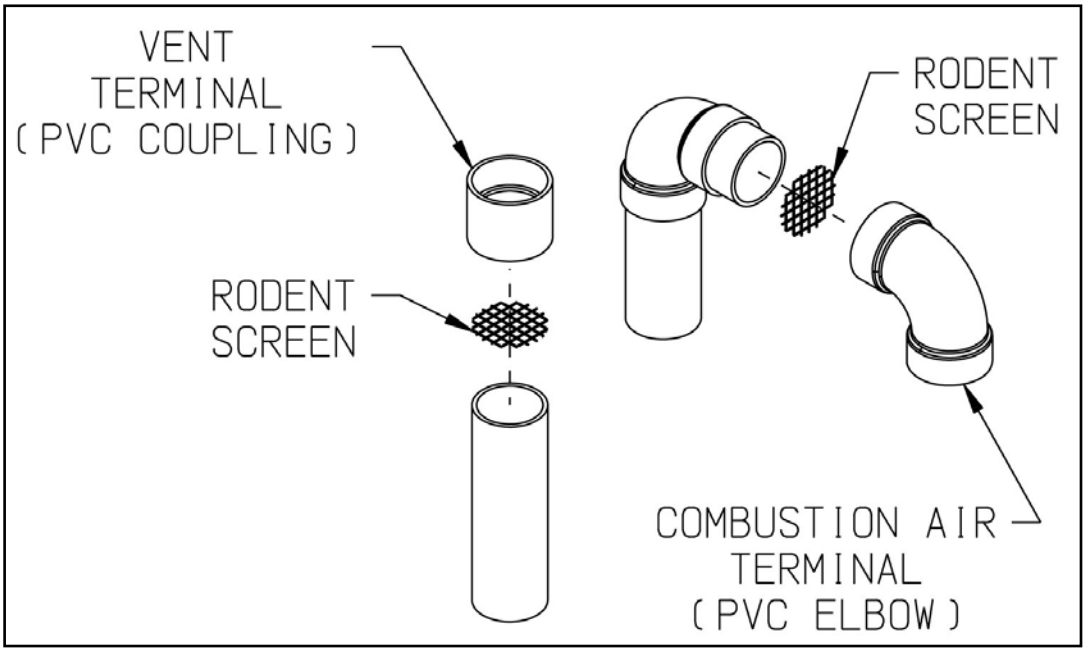

Figure 7.28: Installation of Standard Vertical Terminals

4. Installation of Vertical Fitting Terminals (Terminal Option H):
   a. See Figure 7.28 for the proper orientation of twin pipe vertical terminals.
   b. The coupling is used to secure the rodent screen to the end of the vent pipe.
   c. A 180° bend (or two 90° elbows) are installed on the top of the air intake pipe. If two 90° elbows are used, the rodent screen provided can be installed between them (Figure 7.28). If a 180° bend is used, install the rodent screen in the open side of the bend, using a ring made of PVC pipe. If desired, the termination fittings can be attached to the end of the vent and/or intake pipes with field supplied stainless steel screws so that they can be later removed for cleaning and inspection. If this is done, drill a clearance hole in these fittings and a tap hole in the end of the vent/intake pipes to accept these screws.
   d. Use roof flashings and storm collars to prevent moisture from entering the building. Seal the roof flashing to the roof using generally accepted practice for the type of roof on the installation. Apply RTV to seal the storm collars to the vent and intake pipes.
5. Installation of IPEX low profile vent terminal (Terminal Option B) - See Figure 7.29:
   a. Cut two holes in wall to accommodate the size PVC pipe being used. The distance between hole centers is 5.6".
   b. Slide both vent and intake air pipes through the holes and cement them to the base of the vent termination kit using a primer and cement listed for use with PVC.
   c. Fasten the vent base to the wall using the supplied screws and anchors. The anchors require the drilling of a 3/16" hole x 1-3/16" deep. Locate the holes using the vent base as a template.
   d. Screw the vent cap to the vent base using the supplied screws.
   e. Once the vent termination and pipes are secure seal the wall penetrations from the interior using a weather resistant RTV sealant.
6. Installation of Diversitech Low Profile Terminal (Terminal Option C) – See Figure 7.30:
   a. Use vent plate as a guide to locate the openings for the vent and air intake pipes, as well as to locate the holes for the mounting screws.
   b. Drill two 3-1/8 holes through the wall for the vent and intake pipes.
   c. Drill four 3/16 holes for the mounting screws.
   d. Install the vent and intake pipe sections passing through the wall. Cut the pipes so that they protrude the following distances from the surface on which the vent plate will be mounted:
      - Vent: Between 1-3/4 and 2-1/4"
      - Intake: Between ¼ and 1"
   e. Seal pipe penetrations in wall with RTV (silicone sealant).
   f. Mount the vent plate using the #8 x 2" screws and anchors provided with this kit.
   g. Seal the vent plate to the wall with RTV.
   h. Apply a bead of RTV around the OD of the vent pipe near its end.
   i. Slide the vent cap over the vent pipe and secure to the wall plate with the #8 x 2" screws provided.
7. Installation of IPEX FGV or Diversitech CVENT Concentric Vent Terminal (Terminal Options D,E,I & J) - This terminal may be used for either horizontal or vertical venting. See Figure 7.32 for horizontal installation or Figure 7.33 for vertical installation. When PVC is used for venting the 30" CPVC straight section and CPVC elbow supplied must be used prior to connection of the vent system to this terminal. If the vent system is too short to permit this, use the IPEX FGV CPVC terminal:
   a. For horizontal installations at the planned location cut a round hole in the exterior wall 1/2" larger than the "C" dimension indicated on Figure 7.31 for the size terminal being used. (See Part VII-B of this manual for permitted terminal locations).

⚠ WARNING

Asphyxiation Hazard. CPVC/PVC vent piping and fittings rely on glued joints for proper sealing. Follow all manufacturer instructions and warnings when preparing pipe ends for joining and using the primer and the cement.

When PVC is used with the concentric vent kit, at least one 30" CPVC straight section and at least one CPVC elbow must be used prior to connection of the vent system to this terminal. If the vent system is too short to permit this, use an FGV CPVC terminal.

Do not operate boiler without the rain cap in place.

Method of securing and sealing terminals to the outside wall must not restrain the expansion of vent pipe.

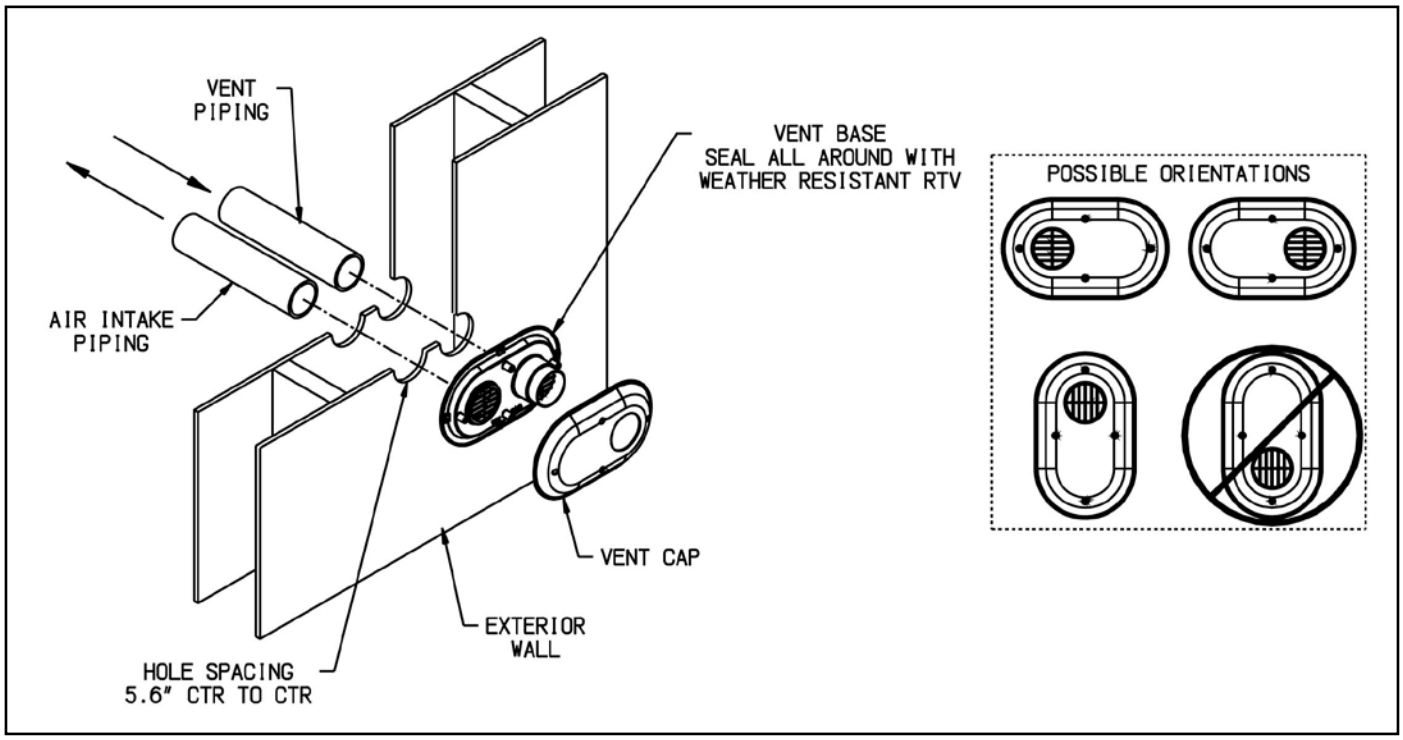

Figure 7.29: Installation of IPEX Low Profile Terminal Through Sidewall

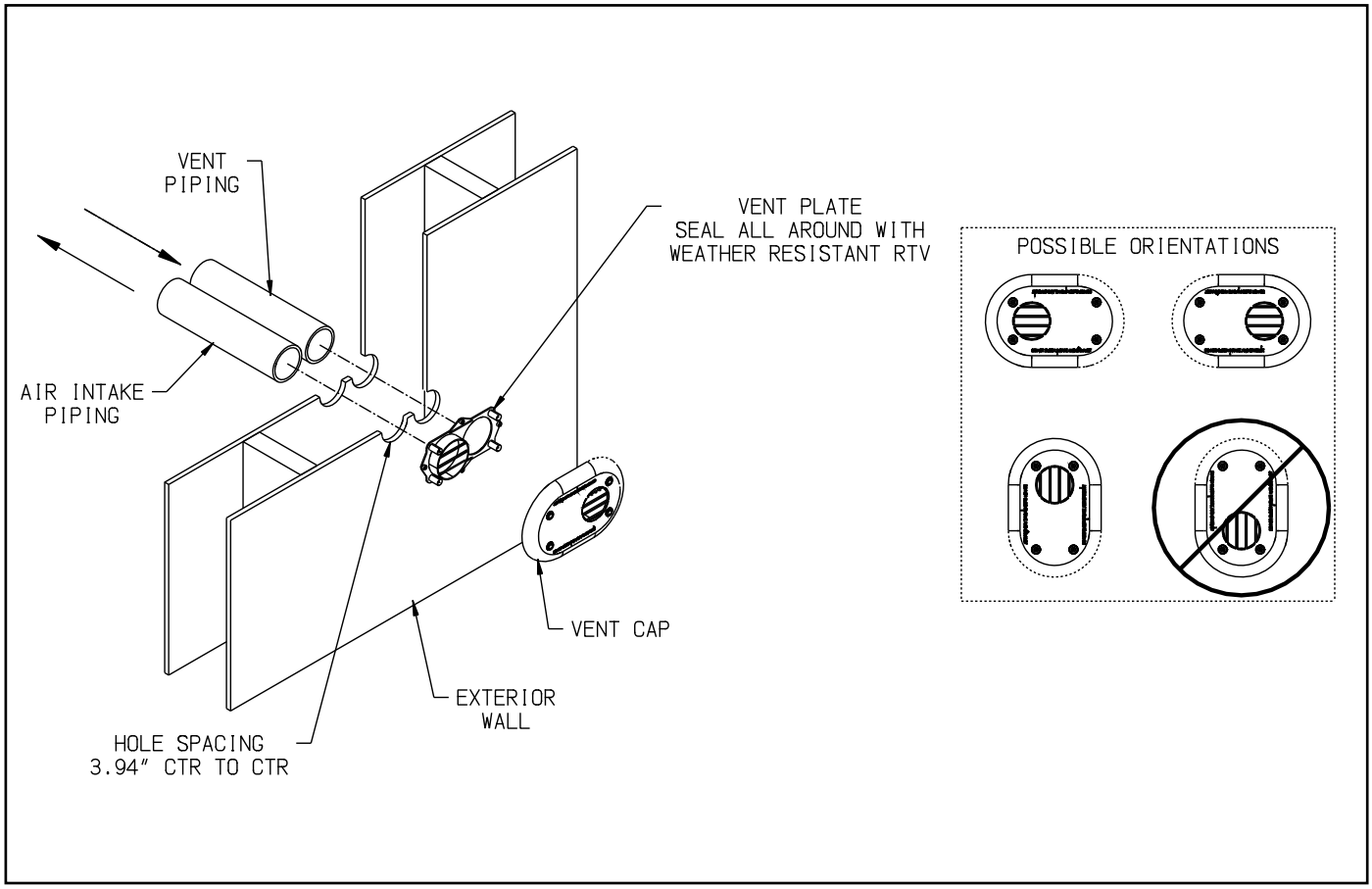

Figure 7.30: Installation of Diversitech Low Profile Terminal Through Sidewall

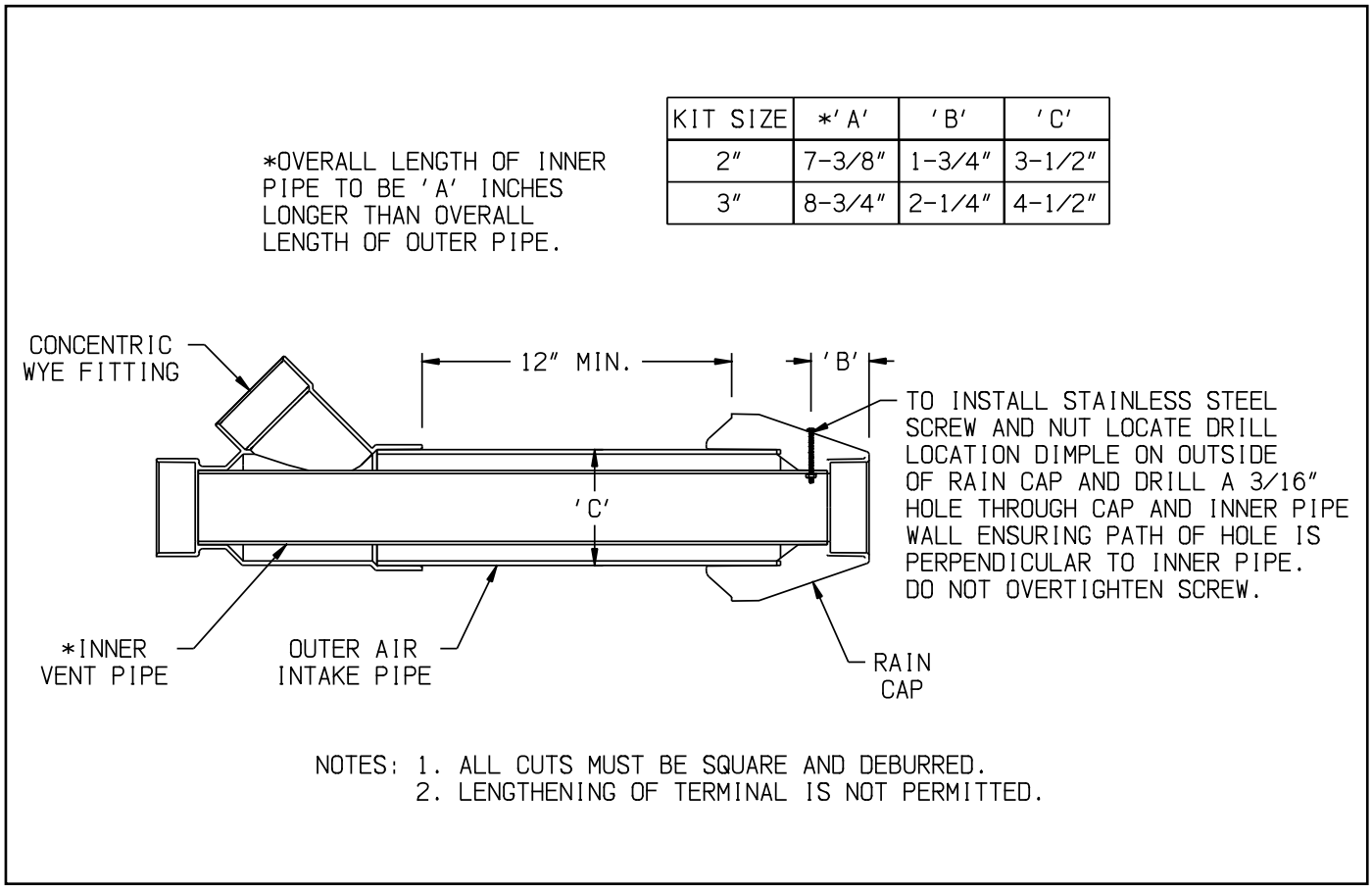

KIT SIZE	*'A'	'B'	'C'
2"	7-3/8"	1-3/4"	3-1/2"
3"	8-3/4"	2-1/4"	4-1/2"

Figure 7.31: Cutting IPEX and Diversitech Concentric Vent Terminals

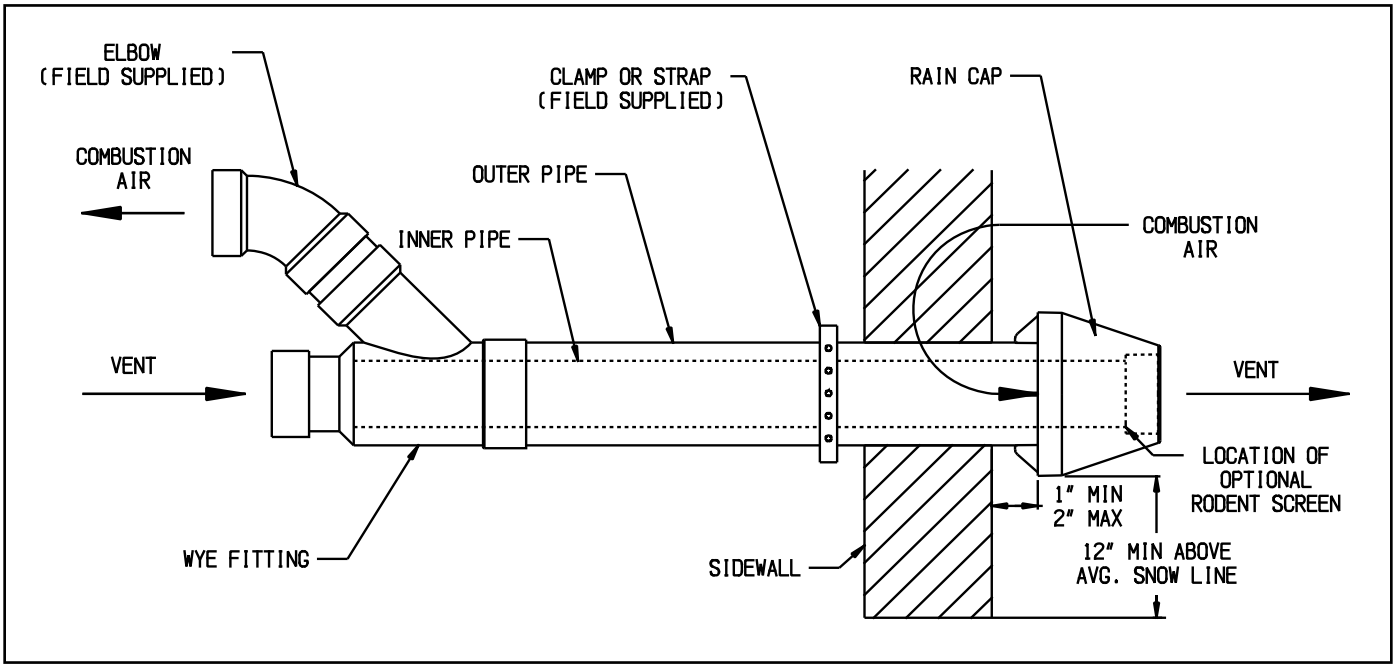

Figure 7.32: Installation of IPEX and Diversitech Concentric Terminal through Sidewall

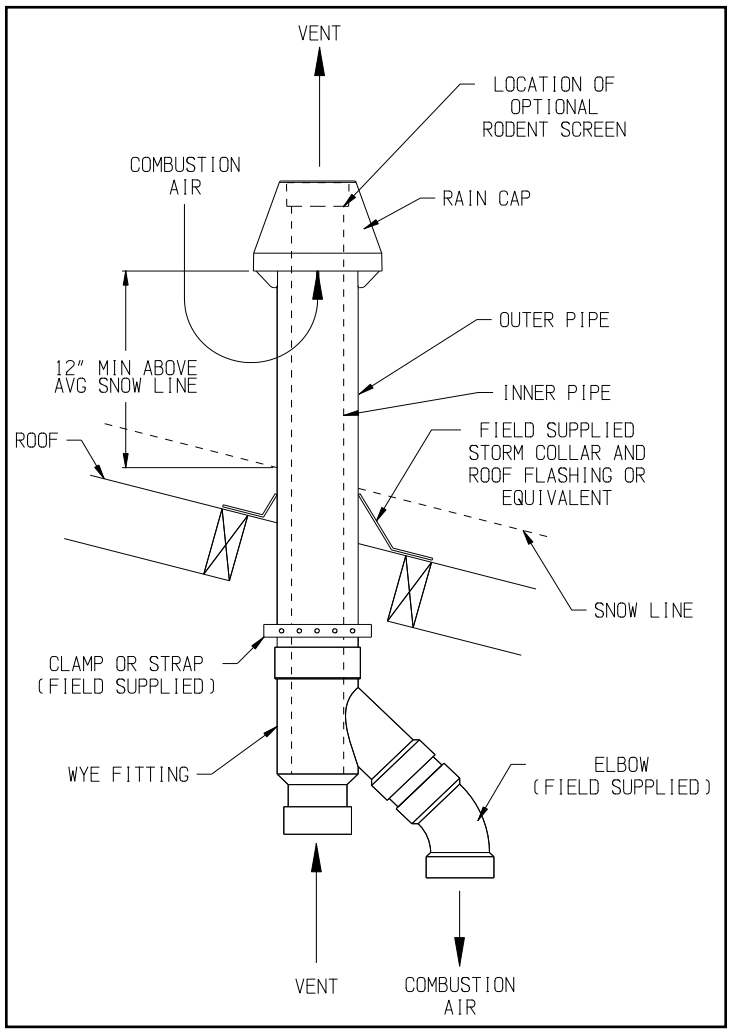

Figure 7.33: Installation of IPEX and Diversitech Concentric Terminal Through Roof

b. For vertical installations, cut a hole in the roof large enough to clear the concentric terminal at the location of the terminal (see Part VII-C of this manual for permitted terminal locations).

c. If desired, the terminal can be shortened. See Figure 7.31 for specific information on making the terminal kit shorter based on the kit size being used. Cut the pipe squarely and de-burr both the OD and ID of the cut edges.

d. Cement the inner pipe section of PVC pipe supplied with this kit to the Wye fitting using a primer and cement listed for use with PVC.

e. Cement the outer pipe to the Wye, being careful, to keep the inner and outer pipes concentric.

f. Slip the partially assembled terminal through the wall or ceiling from the inside and for horizontal installations orient so that the side outlet on the Wye is on or above the horizontal plane.

g. For horizontal installations, seal the gap between the OD of the “outer pipe” and the exterior side of the wall with RTV sealant.

h. Cement the rain cap onto the inner pipe. If desired, the rain cap can be attached to the inner pipe with the supplied stainless steel screw and nut so that it can be later removed for cleaning and inspection. If this is done, drill a 3/16" clearance hole in the rain cap and inner pipe in the location shown on Figure 7.31 for the size terminal kit being used and affix screw and nut. Do not overtighten. A field supplied rodent screen may also installed on the end of the rain cap.

i. For vertical installations, use a roof flashing and storm collar to prevent moisture from entering the building. Seal the roof flashing to the roof using generally accepted practice for the type of roof on the installation. Install the storm collar after verifying that the bottom of the rain cap will be at least 12" above the normal snow line. Apply RTV to seal the storm collars to the terminal.

F. Assembly of DuraVent PolyPro Vent Systems

1. This boiler has been listed for use with the DuraVent PolyPro single wall PolyPropylene vent system to be provided by the installer.

⚠ WARNING

Asphyxiation Hazard. Follow these instructions and the installation instructions included by the original PolyPropylene venting component manufacturers, M&G/DuraVent. Failure to do so could cause products of combustion to enter the building, resulting in severe property damage, personal injury or death. Where a conflict arises between M&G/DuraVent instructions and these instructions, the more restrictive instructions shall govern.

Do not mix vent components or joining methods for listed manufacturers.

Examine all components for possible shipping damage prior to installation.

All condensate that forms in the vent must be able to drain back to the boiler.

2. Assemble the vent system, starting at the boiler:
   a. The vent adaptor has three different inside diameters. The middle inside diameter accepts 3" nominal PolyPro (Figure 7.26). Lubricate the gaskets in the vent adaptor with soapy water and insert the first piece of 3" PolyPro into the adaptor until it bottoms out. Tighten band clamp on vent adapter to secure vent pipe.
   b. If 2" PolyPro is to be used for the vent system, reduce the first piece of 3" PolyPro installed in Step (a) to 2" using DuraVent #3PPS-R2. Otherwise assemble the next piece of 3" PolyPro.
   c. For each joint, verify that the gasket is evenly seated in the bell (female) end of the pipe. Lubricate this gasket with water. Slide a locking band over the male end of the pipe to be joined as shown in Figure 7.34. Push the male end of the next section of pipe into the bell until it bottoms out, then back out 1/4-5/8" to provide room for thermal expansion. Push barb on locking band over the bell end of the first section of pipe as shown in Figure 7.34.
   d. Assemble the rest of the vent system per the manufacturer's installation instructions, being sure to pitch horizontal sections back towards the boiler 5/8" per ft.
   e. Support each horizontal pipe section with a minimum of one wall strap each and at intervals not exceeding 4ft.

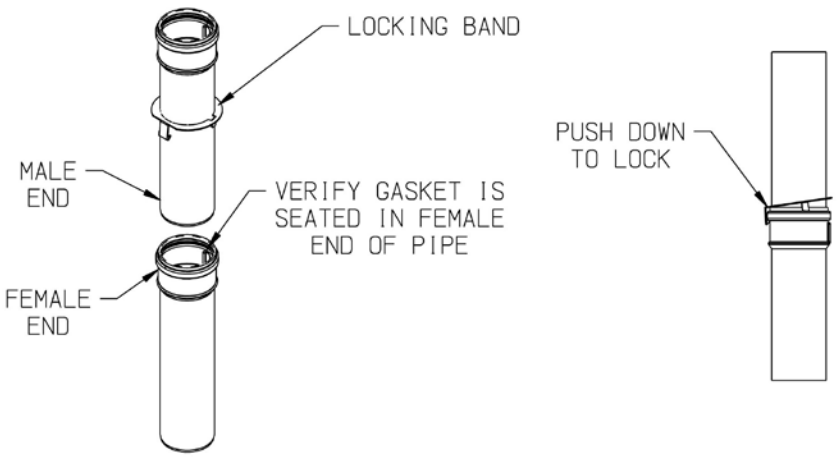

Figure 7.34: PolyPro Locking Band Installation

3. Installation of Air Intake System - Start assembly of the PVC air intake system at the boiler. Assembly of the air intake system is done in the same manner as the vent system except as follows:
   a. Drill a 7/32" clearance hole into the front side of the air intake adapter. Insert the first piece of PVC air intake pipe into the air intake connection and drill a 1/8" tap hole into the PVC which lines up with the 7/32" clearance hole and secure them together with a #10 x 1" sheet metal screw. Seal the joint between the intake pipe and the adaptor with RTV.
   b. All intake piping may be PVC.
   c. There is a 0" minimum clearance between the air intake piping and all types of construction.
   d. To the extent possible, pitch horizontal air intake piping towards the outside.

⚠ WARNING

Asphyxiation Hazard. Vent systems made by M&G/DuraVent rely on gaskets for proper sealing. When these vent system is used, take the following precautions:

- **Make sure that gasket is in position and undamaged in the female end of the pipe.**
- **Make sure that both the male and female pipes are free of damage prior to assembly.**
- **Only cut vent pipe as permitted by the vent manufacturer in accordance with their instructions. When pipe is cut, the cut end must be square and carefully de-burred prior to assembly.**
- **Use locking band clamps at all vent pipe joints.**
- **Do not use anything other than soapy water to lubricate gaskets.**

NOTICE

The venting system must be free to expand and contract and supported in accordance with the installation instructions included by the original PolyPropylene venting component manufacturer, M&G/DuraVent. PolyPropylene pipe sections must be disengaged 1/4 to 5/8 in. (6 mm to 16 mm) per joint to allow for thermal expansion.

4. Installation of Horizontal Fitting Terminals (Terminal Option A):
   a. See Figure 7.35 for proper orientation of twin pipe horizontal terminals. Outer edge of exhaust coupling must be 10" or less from the wall surface. (Figure 7.9)
   b. Remove the gasket from the end of the integral exhaust coupling and insert DuraVent Bird Guard #2PPS-BG or #3PPS-BG in it's place.
   c. Add PVC intake per instructions from Part VII-F.
5. Installation of Vertical Fitting Terminals (Terminal Option H):
   a. See Figure 7.36 for the proper orientation of twin pipe vertical terminals.
   b. Remove the gasket from the end of the integral exhaust coupling and insert the installer supplied rodent screen in it's place.
   c. A 180° bend (or two 90° elbows) are installed on the top of the air intake pipe. If two 90° elbows are used, the rodent screen provided can be installed between them (Figure 7.36). If a 180° bend is used, install the rodent screen in the open side of the bend, using a ring made of PVC pipe. If desired, the termination fittings can be attached to the end of the intake pipes with field supplied stainless steel screws so that they can be later removed for cleaning and inspection. If this is done, drill a clearance hole in these fittings and a tap hole in the end of the intake pipes to accept these screws.
   d. Use roof flashings and storm collars to prevent moisture from entering the building. Seal the roof flashing to the roof using generally accepted practice for the type of roof on the installation. Apply RTV to seal the storm collars to the vent and intake pipes.

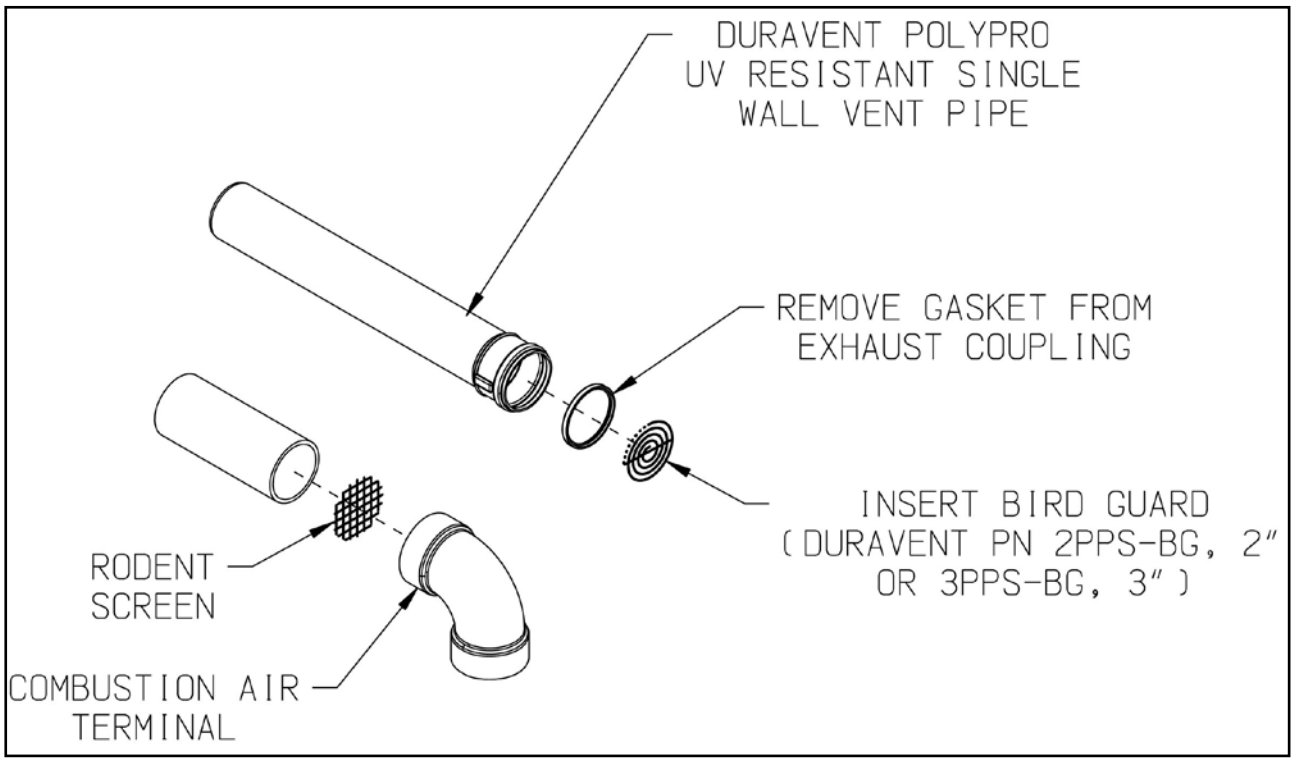

Figure 7.35: Installation of Duravent PolyPro UV Resistant Single Wall Horizontal Terminal

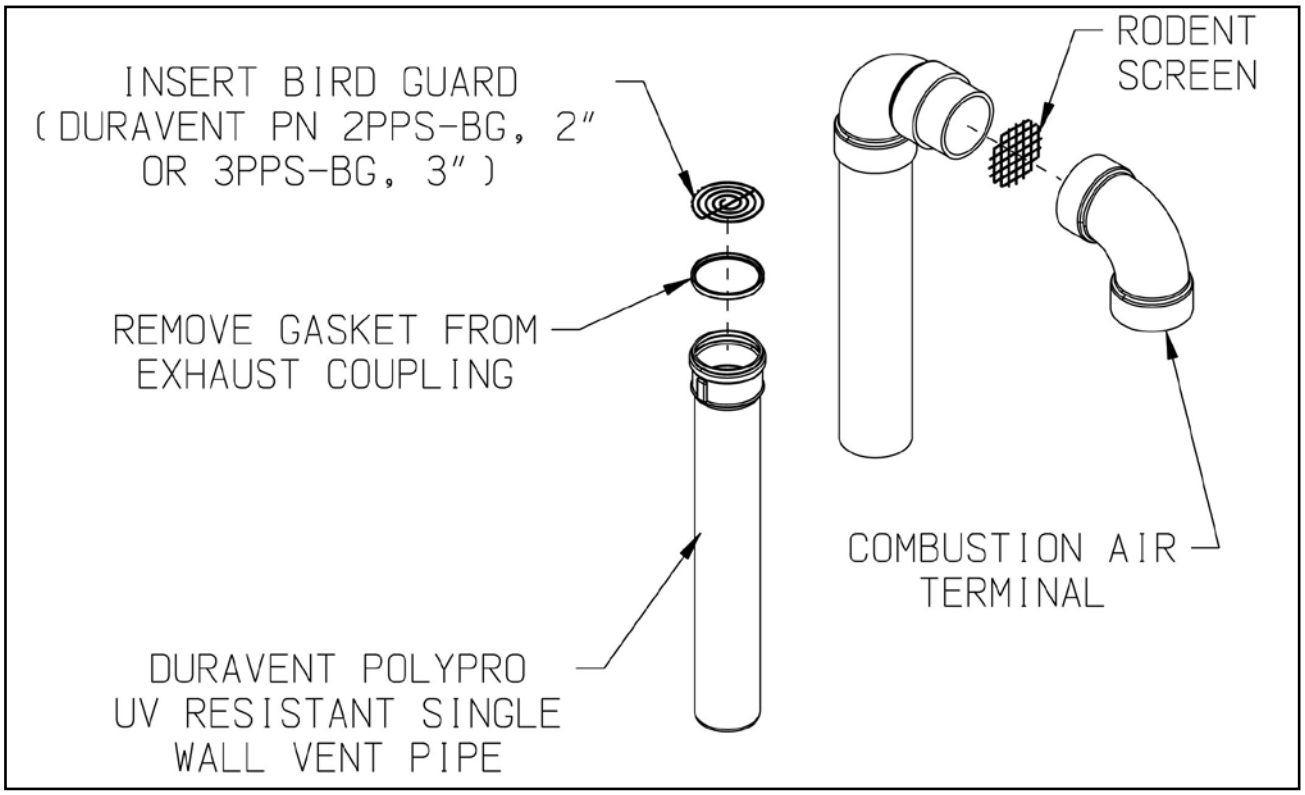

Figure 7.36: Installation of Duravent PolyPro UV Resistant Single Wall Vertical Terminal

6. Installation of DuraVent PolyPro Horizontal Concentric Vent Terminal (Terminal Option D) -
   Install PolyPro Horizontal Concentric Termination Kit #2PPS-HK or #3PPS-HK (Figure 7.38) as follows:
   a. At the planned location cut a 4-1/8" round hole for the 2" terminal or a 5-1/8" round hole for the 3" terminal in the exterior wall. (See Part VII-A of this manual for permitted terminal locations).
   b. If desired, the terminal can be shortened. Mark the desired location of the cut on the outer pipe no closer than 2" from the edge of the tab on the interior wall plate. Prior to cutting outer pipe measure dimension 'A' of the inner pipe as shown in Figure 7.37 and maintain this dimension after cutting the outer pipe. All cuts must be square and de-burred.
   c. Attach the exterior wall plate and seal all around with weather resistant RTV.
   d. Slide the cap through the exterior wall plate and hole from the outside of the building and orient the termination so the air intake slots face down. The cap must be installed level or sloped 1/8" per foot away from the appliance.
   e. Seal the termination to the exterior wall plate with weather resistant RTV.
   f. Slide the interior wall plate over the termination and attach to the wall from inside the room.
   g. Attach the interior wall plate to the termination with the provided hardware.
   h. Install gaskets into co-linear adapter.
   i. Attach co-linear adapter to horizontal termination and orient so that the side outlet on the adapter is on or above the horizontal plane.

7. Vertical Installations using PolyPro Vertical Concentric Termination Kit #2PPS-VK or #3PPS-VK (Figure 7.39):
   a. Cut a hole in the roof large enough to clear the concentric terminal at the location of the terminal (see Part VII-A of this manual for permitted terminal locations).
   b. Use a roof flashing and storm collar to prevent moisture from entering the building. See Figure 7.39 for the model number of the flashing to be used depending on the type of roof. Seal the roof flashing to the roof using generally accepted practice for the type of roof on the installation.
   c. Slide the vertical termination into the flashing from above until seated on the flashing.
   d. Plumb the termination and mount the support bracket to the structure.
   e. Install gaskets into co-linear adapter.
   f. Attach co-linear adapter to vertical termination.

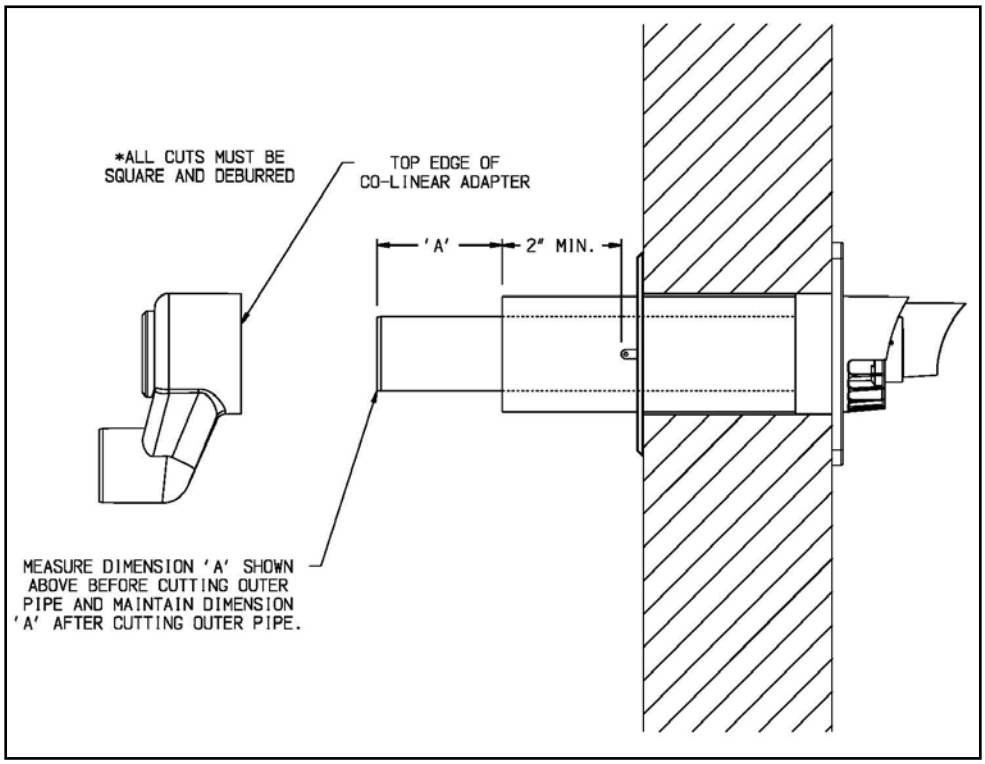

Figure 7.37: Cutting Duravent PolyPro Horizontal Concentric Vent Terminal

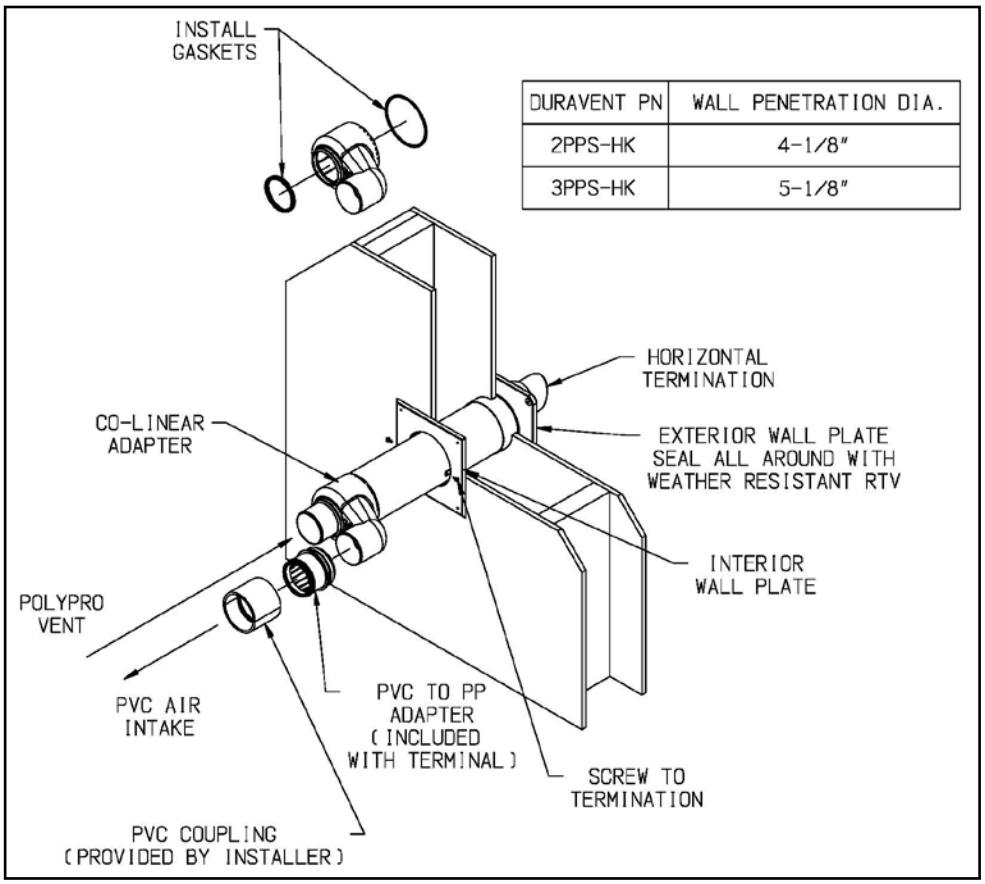

Figure 7.38: Installation of Duravent PolyPro Concentric Vent Terminal Through Sidewall

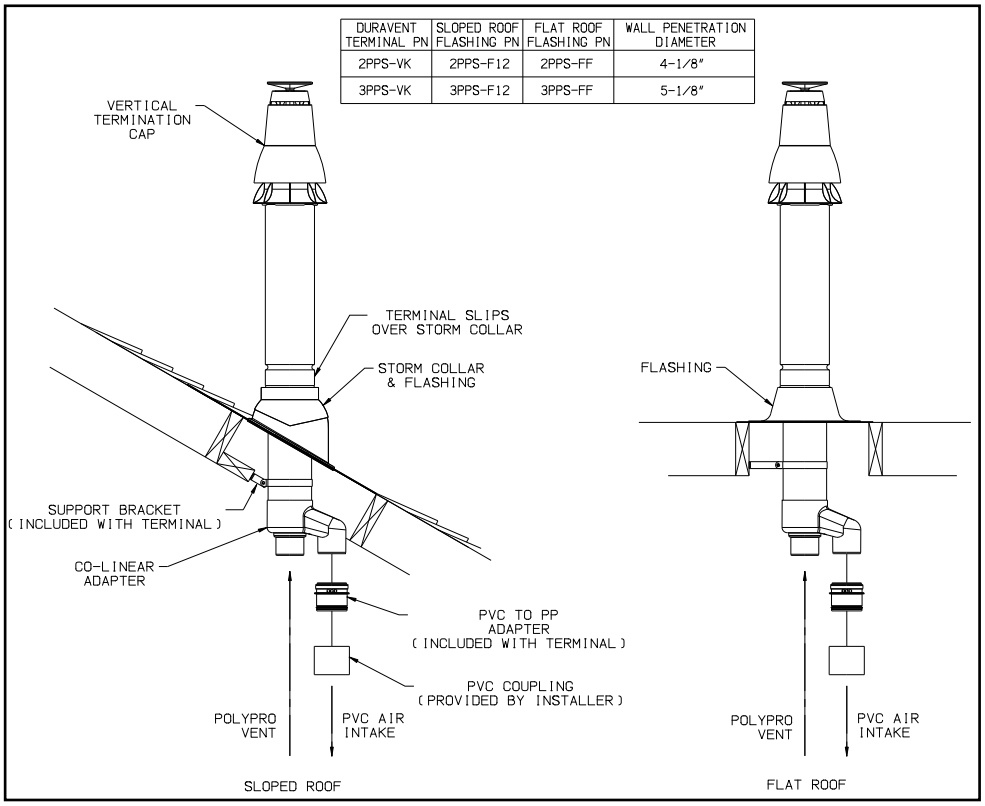

Figure 7.39: Installation of Duravent PolyPro Concentric Terminal Through Roof

8. Installations using PolyPro-flex (Vent Options 18,19,33,34):

WARNING

Asphyxiation Hazard. When using PolyPro flex, observe the following precautions:

- **PolyPro flex may be damaged by handling at low temperatures. Do not bend, uncoil, or attempt to install if it has been stored at a temperature below 42°F without allowing it to warm to a higher temperature first.**
- **Do not bend PolyPro flex more than 45°.**
- **Instructions below reference the DuraVent PolyPro Flex instruction manual. Not all vent configurations shown in the DuraVent manual are listed for use with this boiler.**

Refer to DuraVent PolyPro flex Instructions for assembly of all flex components including the chimney cap and the adaptor to rigid PolyPro at the base of the masonry or B vent chimney. In addition, observe the following requirements:

a. Refer to the appropriate Vent option in Tables 7.13b or 7.21 for a list of the principle flex components required. Rigid vent pipe by the same manufacturer will also be required for the run from the boiler to the base of chimney.

b. Masonry chimneys cannot be used for an air chase

c. B vent chimneys can only be used for an air chase (Vent options 18, 19) if the B vent has the minimum size shown in Table 7.13b and is fully accessible for sealing of all joints and seams.

d. When Vent Option 18 or 19 is used, install a Tee on the base of the B-vent that is the same size as the B- Vent chimney. Install the PolyPro Lower B–Vent adaptor in the base of this Tee as described in the DuraVent PolyPro Flex instructions.

Connection of the PVC air intake pipe to the side outlet of the tee is made using a cap and a PVC socket x male thread adaptor (2" or 3", depending on the Vent Option). Cut a clearance hole in the cap for the male threads. Secure the adaptor to the cap using a 2" or 3" electrical conduit lock nut. Seal all joints with RTV.

G. Assembly of Selkirk Polyflue Vent Systems

WARNING

Asphyxiation Hazard. When using PolyPro flex, observe the following precautions:

- **PolyPro flex may be damaged by handling at low temperatures. Do not bend, uncoil, or attempt to install if it has been stored at a temperature below 42°F without allowing it to warm to a higher temperature first.**
- **Do not bend PolyPro flex more than 45°.**
- **Instructions below reference the DuraVent PolyPro Flex instruction manual. Not all vent configurations shown in the DuraVent manual are listed for use with this boiler.**

1. This boiler has been listed for use with the Selkirk Polyflue single wall PolyPropylene vent system to be provided by the installer.

2. Assemble the vent system, starting at the boiler:

a. The vent adaptor has three different inside diameters. The middle inside diameter accepts 3" nominal Polyflue (Figure 7.26). Lubricate the upper gasket in the vent adaptor with mild soapy water and insert the first piece of 3" Polyflue into the adaptor until it bottoms out. Tighten band clamp on vent adapter to secure vent pipe.

b. If 2" Polyflue is to be used for the vent system, reduce the first piece of 3" Polyflue installed in Step (a) to 2" using Selkirk #3PF-3R2. Otherwise assemble the next piece of 3" Polyflue.

c. For each joint, verify that the gasket is evenly seated in the bell (female) end of the pipe. Lubricate this gasket with mild soapy water. Slide a Pipe Locking Band over the male end of the pipe to be joined as shown in Figure 7.40. Push the male end of the next section of pipe into the bell until it bottoms out, then back out 1/8—1/4" to provide room for thermal expansion. Slide pipe locking band over the female end of the connections and tighten both hose clamps.

d. Assemble the rest of the vent system per the manufacturer's installation instructions, being sure to pitch horizontal sections back towards the boiler 5/8" per ft.

e. Support each pipe section as described in Polyflue manual at intervals not exceeding the following:

Pipe size	Horizontal	Vertical
2"	30in	16ft
3"	39in	16ft

3. Installation of Air Intake System - Start assembly of the PVC air intake system at the boiler. Assembly of the air intake system is done in the same manner as the vent system except as follows:
   a. Drill a 7/32" clearance hole into the front side of the air intake adapter. Insert the first piece of PVC air intake pipe into the air intake connection and drill a 1/8" tap hole into the PVC which lines up with the 7/32" clearance hole and secure them together with a #10 x 1" sheet metal screw. Seal the joint between the intake pipe and the adaptor with RTV.
   b. All intake piping may be PVC. There is a 0" minimum clearance between the air intake piping and all types of construction.
   c. To the extent possible, pitch horizontal air intake piping towards the outside.
4. Installation of Horizontal Fitting Terminals (Terminal Option A):
   a. See Figure 7.41 for proper orientation of twin pipe horizontal terminals. Outer edge of exhaust coupling must be 10" or less from the wall surface. (Figure 7.9)
   b. Remove the gasket from the end of the integral exhaust coupling and insert Selkirk #2PF-HVST or #3PFHVST in its place.
   c. Add PVC intake per instructions from Part VII-F.
5. Installation of Vertical Fitting Terminals (Terminal Option H):
   a. See Figure 7.42 for the proper orientation of twin pipe vertical terminals.
   b. Remove the gasket from the end of the integral exhaust coupling and insert Selkirk #2PF-HVST or #3PFHVST in its place.
   c. A 180° bend (or two 90° elbows) are installed on the top of the air intake pipe. If two 90° elbows are used, the rodent screen provided can be installed between them (Figure 7.42). If a 180° bend is used, install the rodent screen in the open side of the bend, using a ring made of PVC pipe. If desired, the termination fittings can be attached to the end of the intake pipes with field supplied stainless steel screws so that they can be later removed for cleaning and inspection. If this is done, drill a clearance hole in these fittings and a tap hole in the end of the intake pipes to accept these screws.
   d. Use roof flashings and storm collars to prevent moisture from entering the building. Seal the roof flashing to the roof using generally accepted practice for the type of roof on the installation. Apply RTV to seal the storm collars to the vent and intake pipes.

WARNING

Asphyxiation Hazard. Selkirk Polyflue vent systems rely on gaskets for proper sealing. When this vent system is used, take the following precautions:

- **Make sure that gasket is in position and undamaged in the female end of the pipe.**
- **Make sure that both the male and female pipes are free of damage prior to assembly.**
- **Only cut vent pipe as permitted by the vent manufacturer in accordance with their Instructions. When pipe is cut, the cut end must be square and carefully de-burred prior to assembly.**
- **Use pipe locking bands at all vent pipe joints.**

NOTICE

The venting system must be free to expand and contract and supported in accordance with the installation instructions included by the original PolyPropylene venting component manufacturer, Selkirk. PolyPropylene pipe sections must be disengaged 1/8 to 1/4 in. (3mm to 6mm) per joint to allow for thermal expansion.

6. Installations using flexible Polyflue (Vent Options 35,36):

WARNING

Asphyxiation Hazard. When using Polyflue flex, observe the following precautions:

- **Polyflue flex may be damaged by handling at low temperatures. Do not bend, uncoil or attempt to install if it has been stored at a temperature below 42°F without allowing it to warm to a higher temperature first.**
- **Do not bend Polyflue flex more than 45°.**
- **Instructions below reference the Selkirk Polyflue instruction manual. Not all vent configurations shown in the Selkirk vent manual are listed for use with this boiler.**

Refer to Selkirk Polyflue Instructions for assembly of all flex components including the chimney cap and the adaptor to rigid Polyflue at the base of the masonry or B vent chimney. In addition, observe the following requirements:

a. Refer to the appropriate Vent option in Table 7.21 for a list of the principle flex components required. Rigid vent pipe by the same manufacturer will also be required for the run from the boiler to the base of the chimney.

b. Polyflue may not be used in air chase applications.

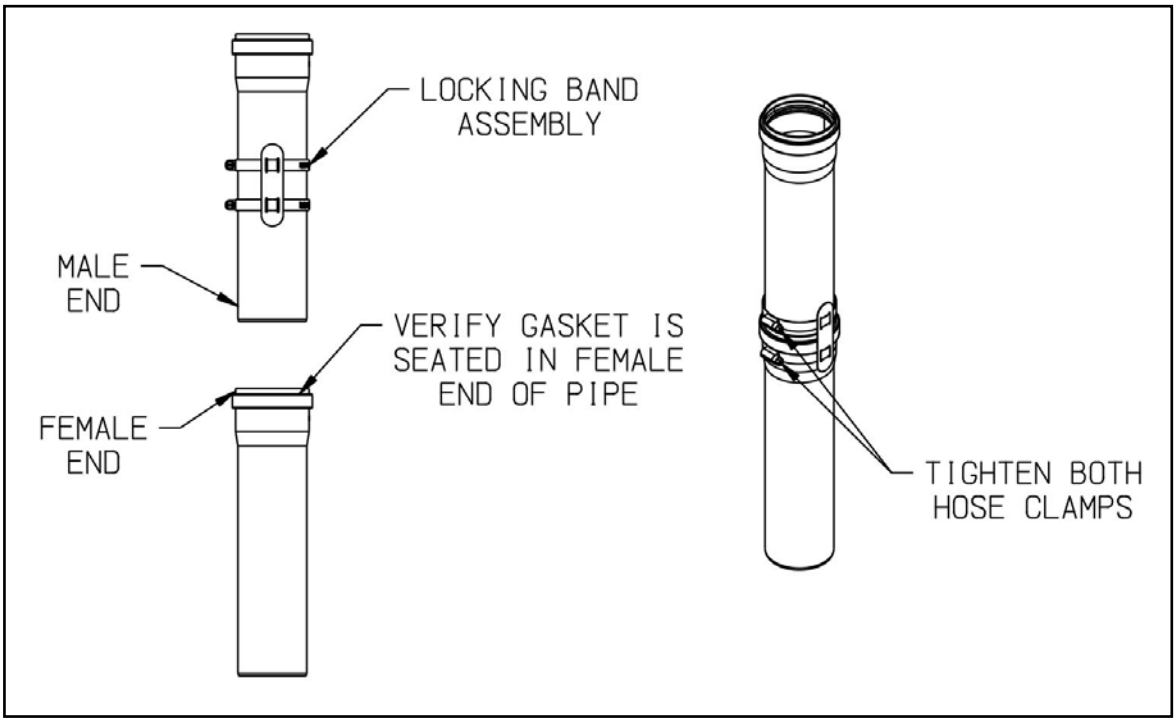

Figure 7.40: Polyflue Pipe Locking Band Installation

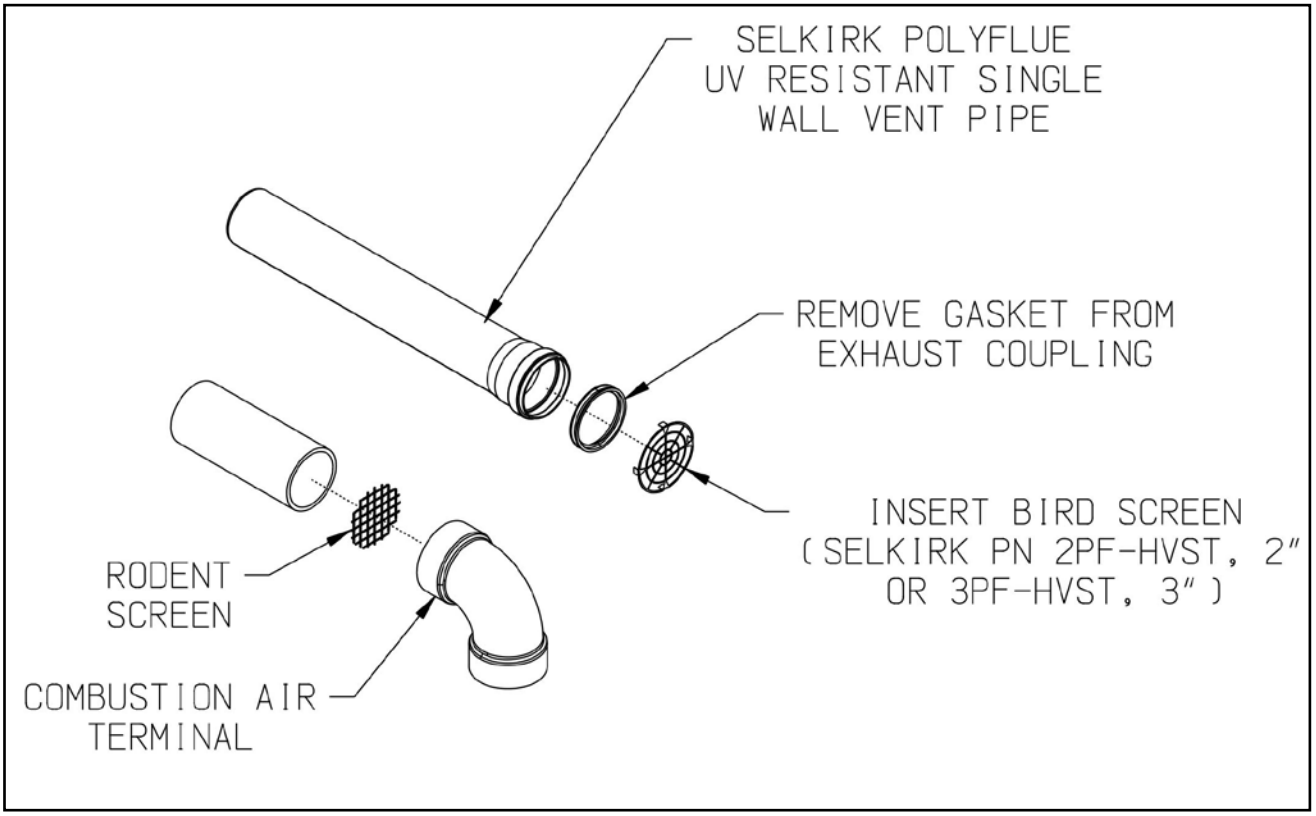

Figure 7.41: Installation of Selkirk Polyflue UV Resistant Single Wall Horizontal Terminal

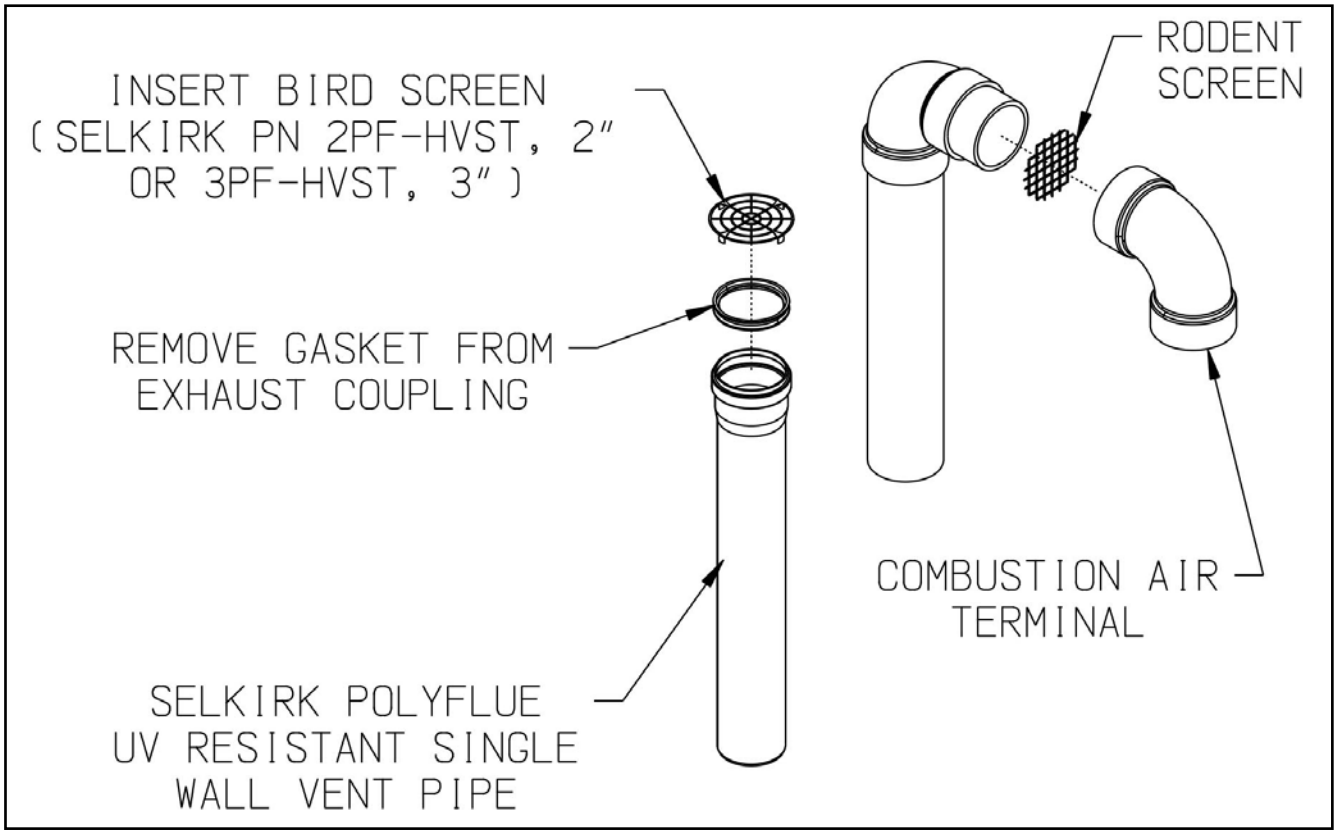

Figure 7.42: Installation of Selkirk Polyflue UV Resistant Single Wall Vertical Terminal

H. Assembly of Centrotherm InnoFlue Vent Systems

1. This boiler has been listed for use with the Centrotherm InnoFlue single wall PolyPropylene vent system to be provided by the installer.

⚠ WARNING

Asphyxiation Hazard. Follow these instructions and the installation instructions included by the original PolyPropylene venting component manufacturers, Centrotherm. Failure to do so could cause products of combustion to enter the building, resulting in severe property damage, personal injury or death. Where a conflict arises between Centrotherm instructions and these instructions, the more restrictive instructions shall govern.

Do not mix vent components or joining methods for listed manufacturers.

Examine all components for possible shipping damage prior to installation.

All condensate that forms in the vent must be able to drain back to the boiler.

2. Assemble the vent system, starting at the boiler:
   a. The vent adaptor has three different inside diameters. The middle inside diameter accepts 3" nominal InnoFlue (Figure 7.26). Lubricate the gaskets in the vent adaptor with water and insert the first piece of 3" InnoFlue into the adaptor until it bottoms out. Tighten band clamp on vent adapter to secure vent pipe.
   b. If 2" InnoFlue is to be used for the vent system, reduce the first piece of 3" InnoFlue installed in Step (a) to 2" using Centrotherm # ISRD0302. Otherwise assemble the next piece of 3" InnoFlue.
   c. For each joint, verify that the gasket is evenly seated in the bell (female) end of the pipe. Lubricate this gasket with Centrocerin # IACE50. Slide a connector ring over the male end of the pipe to be joined as shown in Figure 7.43. Push the male end of the next section of pipe into the bell until it bottoms out, then back out 1/4" to provide room for thermal expansion. Push hook on connecting ring over the bell end of the first section of pipe as shown in Figure 7.43.
   d. Assemble the rest of the vent system per the manufacturer's installation instructions, being sure to pitch horizontal sections back towards the boiler 5/8"/ft.
   e. Support each horizontal pipe section with a minimum of one wall strap each and at intervals not exceeding 39in.

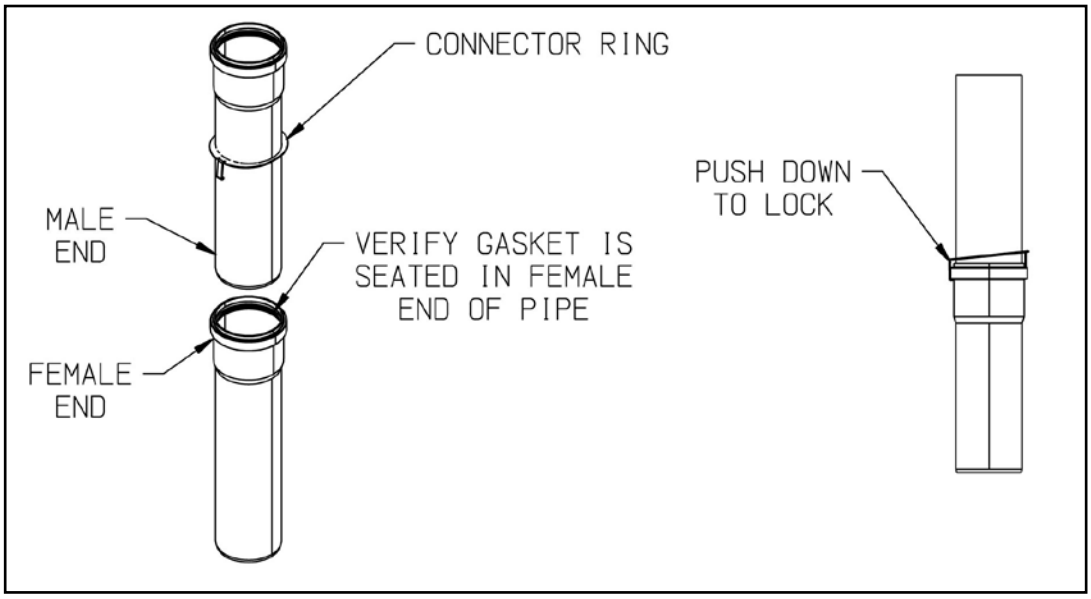

Figure 7.43: InnoFlue Connector Ring Installation

3. Installation of Air Intake System - Start assembly of the PVC air intake system at the boiler. Assembly of the air intake system is done in the same manner as the vent system except as follows:
   a. Drill a 7/32" clearance hole into the front side of the air intake adapter. Insert the first piece of PVC air intake pipe into the air intake connection and drill a 1/8" tap hole into the PVC which lines up with the 7/32" clearance hole and secure them together with a #10 x 1" sheet metal screw. Seal the joint between the intake pipe and the adaptor with RTV.
   b. All intake piping may be PVC.
   c. There is a 0" minimum clearance between the air intake piping and all types of construction.
   d. To the extent possible, pitch horizontal air intake piping towards the outside.

⚠ WARNING

Asphyxiation Hazard. Vent systems made by Centrotherm rely on gaskets for proper sealing. When this vent system is used, take the following precautions:

- **Make sure that gasket is in position and undamaged in the female end of the pipe.**
- **Make sure that both the male and female pipes are free of damage prior to assembly.**
- **Only cut vent pipe as permitted by the vent manufacturer in accordance with their instructions. When pipe is cut, the cut end must be square and carefully de-burred prior to assembly.**
- **Use connector rings at all vent pipe joints.**

NOTICE

The venting system must be free to expand and contract and supported in accordance with the installation instructions included by the original PolyPropylene venting component manufacturer, Centrotherm. PolyPropylene pipe sections must be disengaged 1/4 in. (6mm) per joint to allow for thermal expansion.

4. Installation of Horizontal Fitting Terminals (Terminal Option A):
   a. See Figure 7.44 for proper orientation of twin pipe horizontal terminals. Outer edge of end pipe must be 10" or less from the wall surface. (Figure 7.5)
   b. Use plain end UV stabilized Centrotherm 2" pipe # ISEP02 or ISEP0239 or 3" pipe # ISEP03 or ISEP0339 and insert Centrotherm Bird Screen #IASPP02 or #IASPP03 in the end of the pipe.
   c. Add PVC intake per instructions from Part VII-F.

5. Installation of Vertical Fitting Terminals (Terminal Option H):
   a. See Figure 7.45 for the proper orientation of twin pipe vertical terminals.
   b. Use plain end UV stabilized Centrotherm 2" pipe # ISEP02 or ISEP0239 or 3" pipe # ISEP03 or ISEP0339 and insert Centrotherm Bird Screen #IASPP02 or #IASPP03 in the end of the pipe.
   c. A 180° bend (or two 90° elbows) are installed on the top of the air intake pipe. If two 90° elbows are used, the rodent screen provided can be installed between them (Figure 7.45). If a 180° bend is used, install the rodent screen in the open side of the bend, using a ring made of PVC pipe. If desired, the termination fittings can be attached to the end of the intake pipes with field supplied stainless steel screws so that they can be later removed for cleaning and inspection. If this is done, drill a clearance hole in these fittings and a tap hole in the end of the intake pipes to accept these screws.
   d. Use roof flashings and storm collars to prevent moisture from entering the building. Seal the roof flashing to the roof using generally accepted practice for the type of roof on the installation. Apply RTV to seal the storm collars to the vent and intake pipes.

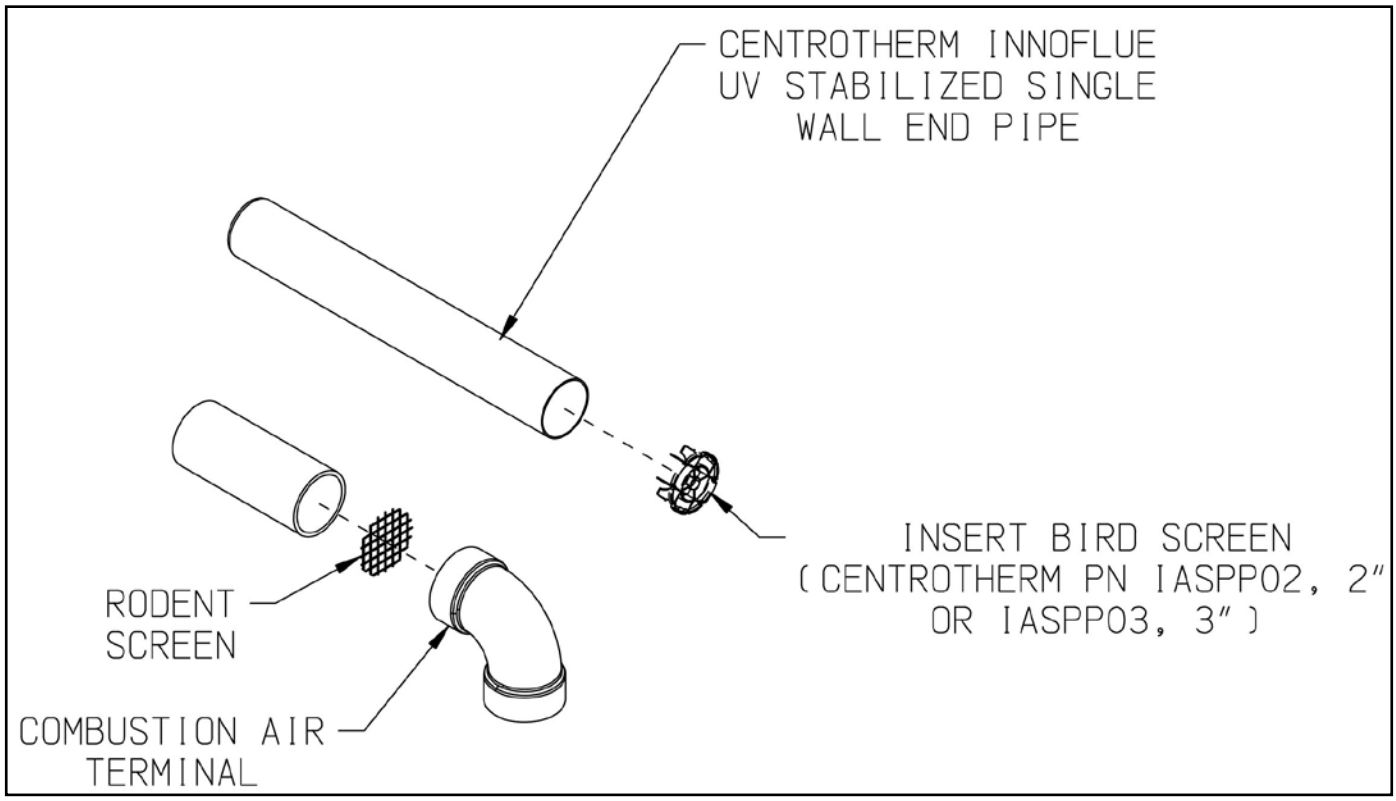

Figure 7.44: Installation of Centrotherm InnoFlue UV Stabilized Single Wall Horizontal Terminal

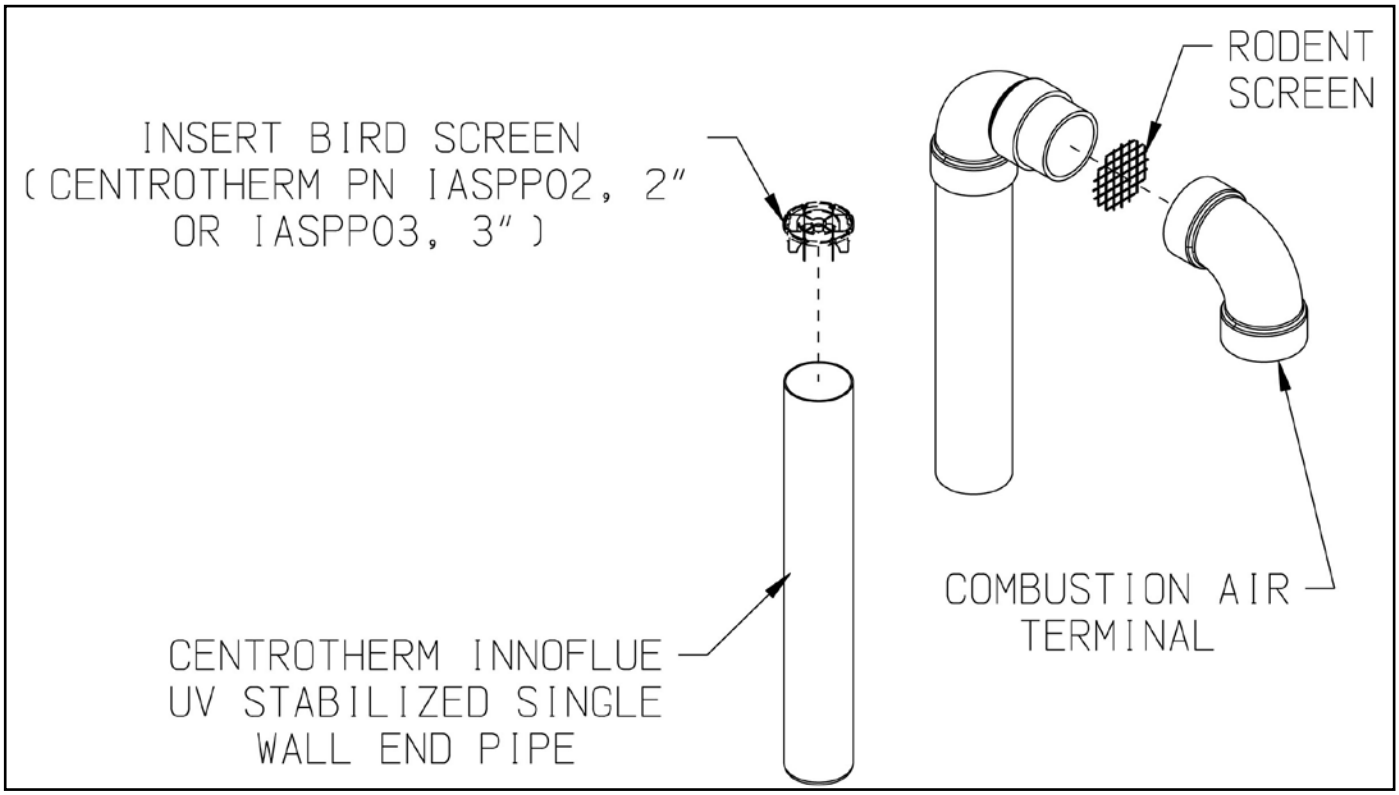

Figure 7.45: Installation of Centrotherm InnoFlue UV Stabilized Single Wall Vertical Terminal

6. Installations using InnoFlue Flex (Vent Options 20,21,37,38):

WARNING

Asphyxiation Hazard. When using InnoFlue Flex, observe the following precautions:

- **InnoFlue Flex may be damaged by handling at low temperatures. Do not bend, uncoil or attempt to install if it has been stored at a temperature below 42°F without allowing it to warm to a higher temperature first.**
- **Do not bend InnoFlue Flex more than 45°.**
- **Instructions below reference the Centrotherm InnoFlue instruction manual. Not all vent configurations shown in the Centrotherm manual are listed for use with this boiler.**

Refer to Centrotherm InnoFlue Instructions for assembly of all flex components including the chimney cap and the adaptor to rigid InnoFlue at the base of the masonry or B vent chimney. In addition, observe the following requirements:

a. Refer to the appropriate Vent option in Tables 7.13b or 7.21 for a list of the principle flex components required. Rigid vent pipe by the same manufacturer will also be required for the run from the boiler to the base of chimney.

b. Masonry chimneys cannot be used for an air chase

c. B vent chimneys can only be used for an air chase (Vent options 20, 21) if the B vent has the minimum size shown in Table 7.13b and is fully accessible for sealing of all joints and seams.

d. When Vent Options 20, 21 are used, install a Tee of the same size at the base of the vent. Route the smooth section of InnoFlue Flex (3") or Flex Adaptor (2") through a cap in the base of this Tee. Use a Centrotherm IAWP2P or IAWP03B wall plate and RTV to seal this penetration. Install the Base Support using the Base support bracket as described in the InnoFlue installation manual.

Connection of the PVC air intake pipe to the side outlet of the tee is made using a cap and a PVC socket x male thread adaptor (2" or 3", depending on the Vent Option). Cut a clearance hole in the cap for the male threads. Secure the adaptor to the cap using a 2" or 3" electrical conduit lock nut. Seal all joints with RTV.

I. Assembly of Stainless Steel Vent Systems

1. This boiler has been listed for use with DuraVent FasNSeal Flex Stainless Steel vent systems to be provided by the installer.

⚠ WARNING

Asphyxiation Hazard. Follow these instructions and the installation instructions included by the original stainless steel venting component manufacturer, DuraVent. Failure to do so could cause products of combustion to enter the building, resulting in severe property damage, personal injury or death. Where a conflict arises between DuraVent instructions and these instructions, the more restrictive instructions shall govern.

Do not mix components from listed manufacturers.

Examine all components from listed manufacturers.

All condensate that forms in the vent must be able to drain back to the boiler.

2. The vent adaptor has three different diameters. The lower diameter accepts 3" Stainless steel (Figure 7.26). A locking band clamp in the adaptor prevents the vent pipe from coming out of the adaptor once it is installed and tightened. Lubricate the upper gaskets in the vent adaptor with water and insert the first piece of 3" stainless into the adaptor until it bottoms out. Tighten locking band clamp to secure vent pipe.

3. Installation of Air Intake System - Start assembly of the PVC air intake system at the boiler. Assembly of the air intake system is done in the same manner as the vent system expect as follows:

   a. Drill a 7/32" clearance hole into the front side of the air intake adaptor. Insert the first piece of PVC air intake pipe into the air intake connection and drill a 1/8" tap hole into the PVC which lines up with the 7/32" clearance hole and secure them together with a #10 x 1" sheet metal screw. Seal the joint between the intake pipe and the adaptor with RTV.

   b. All intake piping may be PVC.

   c. There is a 0" minimum clearance between the air intake piping and all types of construction.

   d. To the extent possible, pitch horizontal air intake piping towards the outside.

⚠ WARNING

Asphyxiation Hazard. Vent systems made by DuraVent rely on gaskets for proper sealing. When these vent systems are used, take the following precautions:
• Make sure that gasket is in position and undamaged in the female end of the pipe.
• Make sure that both male and female pipes are free of damage prior to assembly.
• Only cut vent pipe as permitted by the vent manufacturer in accordance with their instructions.
When pipe is cut, the cut end must be square and carefully de-burred prior to assembly.

NOTICE

The venting system must be free to expand and contract and supported in accordance with the installation instructions included by the original stainless steel venting component manufacturer.

4. Installation using DuraVent FasNSeal Flex (Vent Option 39) - Refer to manufacturer's instructions for assembly of all flex components including the chimney cap and adaptor to rigid pipe at base of masonry chimney. In addition, observe the following requirements:

   a. Refer to the appropriate Vent Option in Table 7.21 for a list of the principle flex components required. Rigid vent pipe by the same manufacturer will also be required for the run from the boiler to the base of the chimney.

   b. Masonry chimneys cannot be used for an air chase.

   c. Flexible stainless steel vent shall be installed in an UNUSED masonry chimney and supplying combustion air through a separate wall or roof combustion air terminal. The unused chimney flue must be structurally sound and in good repair. A chimney is considered UNUSED when it is not being used for an appliance venting, the flexible stainless vent installation is permitted through an adjacent, unused flue providing a local authority having jurisdiction approves such installation. (Figure 7.25b)

d. When flexible stainless steel pipe is used for combustion product venting, it must be installed at vertical or near vertical orientation. This will insure proper condensate flow back towards the boiler.

e. Follow flexible stainless steel pipe manufacturer specific instructions regarding application/listing, permits, minimum clearances to combustibles, installation details (proper joint assembly, pipe support and routing, gasket and fitting installation, optional tooling availability/usage, routing through masonry combustion of combustion product venting and combustion air supply).

f. When there is a conflict between flexible stainless steel pipe manufacturer installation instructions and Boiler Installation, Operating and Service Instructions, the more restrictive instructions shall govern.

WARNING

Asphyxiation Hazard. Flexible stainless steel vent must be installed only in an UNUSED chimney flue. A chimney flue is considered UNUSED when it is not being used for any appliance venting. If chimney is a multiple flue type where one of the multiple flues is being used for an appliance venting, the flexible stainless vent installation is permitted through an adjacent, unused flue providing a local authority having jurisdiction approves such installation.

Asphyxiation Hazard. Flexible stainless steel pipe must be installed at vertical or near vertical plane when used for combustion product venting. Failure to do so will result in improper condensate drainage towards the boiler and possible subsequent vent pipe blockage.

J. Condensate Trap and Drain Line

All condensate which forms in the boiler or vent system passes through the heat exchanger and out of a bottom drain port which is connected to the field-installed condensate trap. This trap allows condensate to drain from the heat exchanger while retaining flue gases in the boiler. This trap is an integral part of the boiler but must be connected to a drain pipe as shown in Figure 7.48. A schedule 40 ¾" PVC elbow is supplied for field connection. Note the following when disposing of the condensate.

1. Attach condensate trap to heat exchanger condensate drain. Slide flexible tubing onto heat exchanger drain and use provided gear clamp to create a seal.
2. Attach condensate trap bracket to bottom of boiler using provided screws.
3. Press flexible pipe into designated slots on bracket. Feed connector at end of float switch, through knockout (bushing supplied for protection) and connect to wire harness (bottom right of control) Figure 7.47.
4. Condensate trap must be filled with water, prior to boiler start up to insure combustion products cannot escape from operating boiler. To fill the trap, inject water in the amount of 1 cup (240 ml) through condensate trap connection. Do not overfill the trap.
5. Construct condensate drain line extension using Schedule 40 ¾" PVC or CPVC. For condensate overflow and vent, install tee with one side open to atmosphere downstream of condensate trap see Figure 7.48. Slope drain line minimum ¼ in/ft (21mm/m) downward toward drain.
6. Ensure plastic fitting with installed float switch is level and not tilted at an angle.
7. Condensate is slightly acidic (3.5-4.5). Do not use metallic pipe or fittings in the condensate drain line. Do not route the drain line through areas that could be damaged by leaking condensate.
8. Some jurisdictions may require that the condensate be neutralized before being disposed of. Dispose of condensate in accordance with local codes.
9. Do not route or terminate the condensate drain line in areas subjected to freezing temperatures.
10. If the point of condensate disposal is above the trap, it will be necessary to use a condensate pump to move condensate to the drain. In such cases, select a condensate pump that is appropriate for use with condensing boilers. If overflow from this pump would result in property damage, select a pump with an overflow switch and use this switch to shut down the boiler. Alternatively, if heat is a necessity, use the overflow switch to trigger an alarm.
11. Do not attempt to move the trap from the location shown in Figure 7.48. Do not attempt to substitute another trap for the one provided with the boiler.

Table 7.46: Maximum Condensate Flow

Boiler Size	Maximum Condensate Flow GPH
85	1.0
110	1.2
155	1.7
205	2.3
270	3.0

⚠ WARNING

Asphyxiation Hazard. Failure to install the condensate drain in accordance with the above instructions could cause flue gas to enter the building, resulting in personal injury or death.

NOTICE

To prevent damage to boiler from condensate backup, ensure condensate drain line is unobstructed and not located in an area prone to freezing.

Boiler condensate is corrosive. Route condensate drain line in a manner such that any condensate leakage will not cause property damage.

Some jurisdictions may require that condensate be neutralized prior to disposal.

Use materials approved by the authority having jurisdiction.

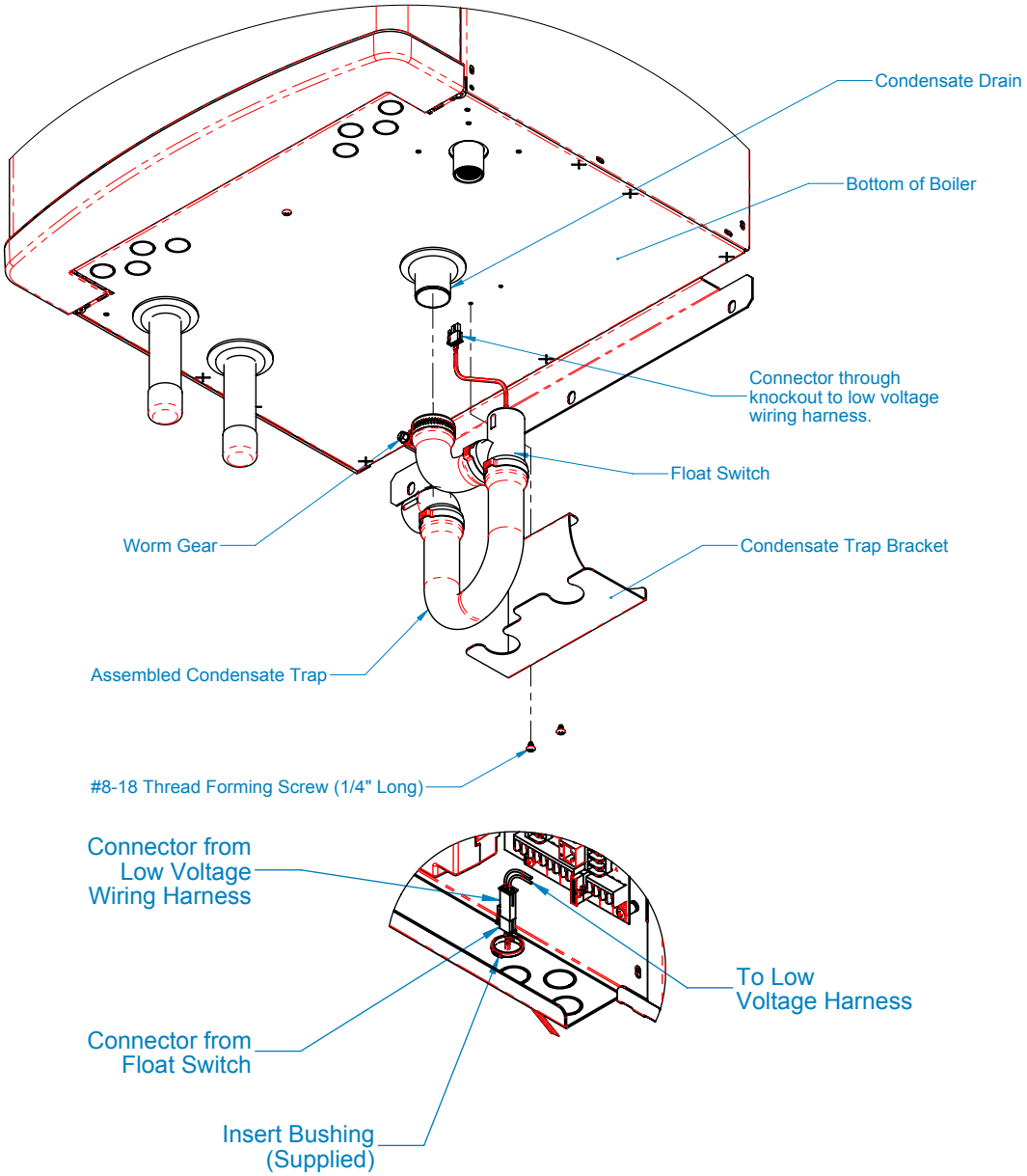

Figure 7.47: Float Switch Connection to Wire Harness

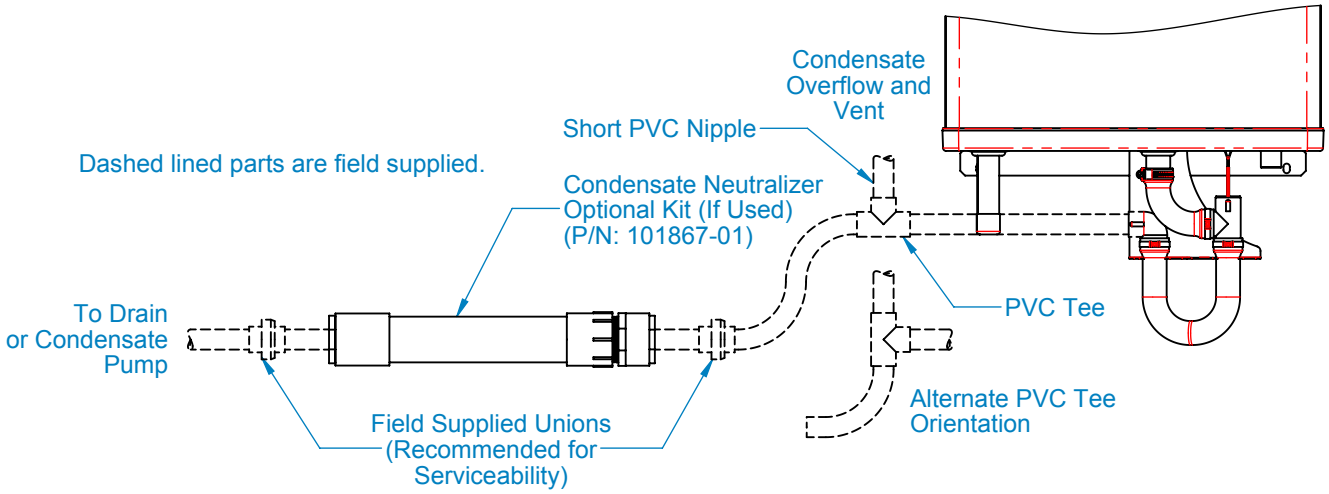

Figure 7.48 Condensate Trap Installation

K. Removing an Existing Boiler From a Common Chimney

This section only applies if this boiler is replacing an existing boiler that is being removed from a common chimney.

In some cases, when an existing boiler is removed from a common chimney, the common venting system may be too large for the remaining appliances. At the time of removal of an existing boiler, the following steps shall be followed with each appliance remaining connected to the common venting system placed in operation, while the other appliances remaining connected to the common venting system are not in operation.

(a) Seal any unused openings in the common venting system.

(b) Visually inspect the venting system for proper size and horizontal pitch and determine there is no blockage or restriction, leakage, corrosion and other deficiencies which could cause an unsafe condition.

(c) Insofar as practical, close all building doors and windows and all doors between the space in which all the appliances remaining connected to the common venting system are located and other spaces of the building. Turn on clothes dryers and any appliance not connected to the common venting system. Turn on any exhaust fans, such as range hoods and bathroom exhausts, so they will operate at maximum speed. Do not operate a summer exhaust fan. Close fireplace dampers.

(d) Place in operation the appliance being inspected. Follow the operating instructions. Adjust thermostat so the appliance will operate continuously.

(e) Test for spillage at the draft hood relief opening after 5 minutes of main burner operation. Use the flame of a match or candle, or smoke from a cigarette, cigar, or pipe.

(f) After it has been determined that each appliance remaining connected to the common venting system properly vents when tested as outlined above, return doors, windows, exhaust fans, fireplace dampers and any other gas-burning appliances to their previous condition of use.

(g) Any improper operation of the common venting system should be corrected so the installation conforms with the National Fuel Gas Code, ANSI Z223.1. When re-sizing any portion of the common venting system, the common venting system should be re sized to approach the minimum size as determined using the appropriate tables in Part 11 of the National Fuel Gas Code, ANSI Z223.1.

WARNING

Never common vent this boiler with other appliances.

Au moment du retrait d'une chaudière existante, les mesures suivantes doivent être prises pour chaque appareil toujours raccordé au système d'evacuation commun et qui fonctionne alors que d'autres appareils toujours raccordés au système d'évacuation ne fonctionnent pas:

(a) Sceller toutes les ouvertures non utilisées du système d'évacuation.

(b) Inspecter de façon visuelle le système d'évcuation pour déterminer la grosseur et l'inclinaison horizontale qui conviennent et s'assurer que le système est exempt d'obstruction, d'étranglement, de fuite, de corrosion et autres défaillances qui pourraient présenter des risques.

(c) Dans la mesure du possible, fermer toutes les portes et les fenêtres du bâtiment et toutes les portes entre l'espace où les appareils toujours raccordés au système d'évacuation sont installés et les autres espaces du bâtiment. Mettre en marche les sécheuses, tous les appareils non raccordés au système d'évacuation commun et tous les ventilateurs d'extraction comme les hottes de cuisinière et les ventilateurs des salles de bain. S'assurer que ces ventilateurs fonctionnent à la vitesse maximale. Ne pas faire fonctionner les ventilateurs d'été. Fermer les registres des cheminées.

(d) Mettre l'appareil inspecté en marche. Suivre les instructions d'allumage. Régler le thermostat de façon que l'appareil fonctionne de façon continue.

(e) Faire fonctionner le brùleur principal pendant 5 min ensuite, déterminer si le coupe-tirage déborde à l'ouverture de décharge. Utiliser la flamme d'une allumette ou d'une chandelle ou la fumée d'une cigarette, d'un cigare ou d'une pipe.

(f) Une fois qu'il a été déterminé, selon la méthode indiquée ci-dessus, que chaque appareil raccordé au système d'évacuation est mis à l'air libre de façon adéquate. Remettre les portes et les fenêtres, les ventilateurs, les registres de cheminées et les appareils au gaz à leur position originale.

(g) Tout mauvais fonctionnement du système d'évacuation commun devrat être corrigé de façon que l'installation soit conforme au National Fuel Gas Code, ANSI Z223.1/NFPA 54 et (ou) aux codes d'installation CAN/CSA-B149.1. Si la grosseur d'une section du système d'évacuation doit être modifiée, le système devrait être modifié pour respecter les valeurs minimales des tableaux pertinents de l'appendice F du National Fuel Gas Code, ANSI Z223.1/NFPA 54 et (ou) des codes d'installation CAN/CSA-B149.1.

VIII. Gas Piping

WARNING

Explosion Hazard. Failure to properly pipe gas supply to boiler may result in improper operation or leaks of flammable gas.

- **Gas supply to boiler and system must be absolutely shut off prior to installing or servicing boiler gas piping.**
- **Always assure gas piping is absolutely leak free and of the proper size and type for the connected load.**
- **Use a thread compound compatible with liquefied petroleum gas. Failure to use proper thread compounds on all gas connectors may result in leaks of flammable gas.**
- **If inlet pressure is above 1/2 psig (3.4 kPa) an additional gas pressure regulator is required. Consult gas supplier.**
- **Size corrugated stainless steel tubing (CSST) to ensure proper capacity and minimize flow restrictions.**

Gas piping to the boiler must be sized to deliver adequate gas for the boiler to fire at the nameplate input at an inlet pressure between the minimum and maximum values shown in Table 8.2. When sizing, also consider other existing and expected future gas utilization equipment (i.e. water heater, cooking equipment). For more information on gas line sizing, consult the utility or the *National Fuel Gas Code,* NFPA 54/ANSI Z223.1, and/or CAN/CSA B149.1 *Natural Gas and Propane Installation Code.*

Figure 8.1 shows typical gas piping connection to the boiler. A sediment trap must be installed upstream of all gas controls. Install the factory provided manual shut-off valve outside the jacket with a ground joint union as shown. All above ground gas piping upstream from manual shut-off valve must be electrically continuous and bonded to a grounding electrode. Refer to *National Electrical Code,* NFPA 70.

The boiler and its gas connection must be leak tested before placing the boiler in operation. When doing this, the boiler and its individual shut-off must be disconnected from the rest of the system during any pressure testing of that system at pressures in excess of 1/2 psi (3.5kPa). When pressure testing the gas system at pressures of 1/2 psi (3.5kPa) or less, isolate the boiler from the gas supply system by closing its individual manual shut-off valve. Locate leaks using appropriate combustible gas non-corrosive leak detector solution.

DANGER

Explosion Hazard. Do not use matches, candles, open flames or other ignition source to check for leaks.

WARNING

If gas pressure in the building is above ½ psig (3.4 kPa), an additional gas pressure regulator is required. Using one additional regulator for multiple gas appliances may result in unsafe boiler operation. The additional regulator must be able to properly regulate gas pressure at the input of the smallest appliance. If the regulator can not do this, two or more additional regulators are required. Consult regulator manufacturer and/or local gas supplier for instructions and equipment ratings.

CAUTION

Support the weight of the gas line piping independently from the boiler gas connection fitting located on the bottom of the boiler.

If an additional regulator is used to reduce boiler inlet pressure below 1/2 psig (3.4 kPa) it must be at least 6 to 10 ft. upstream of the boiler.

It is very important that the gas line is properly purged by the gas supplier or utility company.

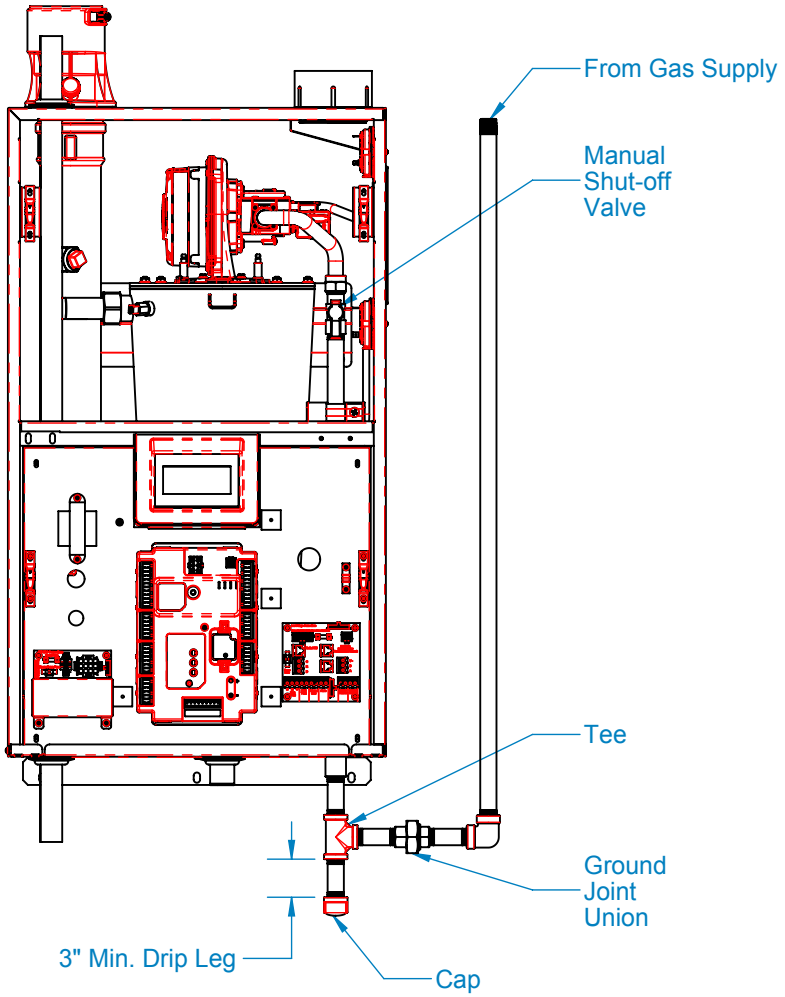

Figure 8.1: Gas Connection to Boiler

Table 8.2: Minimum and Maximum Inlet Pressures

Model Size	Max. (Natural & LP), in. wc	Min. (Natural), in. wc	Min. (LP), in. wc
85-270	14.0	3.0	8.0

IX. System Piping

A. General System Piping Precautions

WARNING

Failure to properly pipe boiler may result in improper operation and damage to boiler or structure.

Install boiler so that the gas ignition system components are protected from water (dripping, spraying, rain, etc.) during boiler operation and service (circulator replacement, etc.).

Oxygen contamination of boiler water will cause corrosion of iron and steel boiler components and can lead to boiler failure. Warranty does not cover problems caused by oxygen contamination of boiler water or scale (lime) build-up caused by frequent addition of water.

WATER QUALITY AND BOILER WATER ADDITIVES
IMPORTANT NOTE

The heat exchanger used in this boiler is made from stainless steel. Once filled with system water, it will be subjected to the effects of corrosion, as well as fouling from any debris introduced from the system. Take the following precautions to minimize the chance of severe heat exchanger damage caused by corrosion and/or overheating:

1 Flush the system before connecting the boiler - In a replacement installation, flushing the system will remove impurities, such as sediment, solder flux, metal shavings, and traces of old boiler additives. Even if the system is new, do not omit this step – new systems will contain flux and may even contain some of the other impurities listed above. Flush the system completely and repeat if necessary to completely remove these contaminants. If necessary, a cleaning agent may be used to assist in system cleaning. See Section XI “Start-up and Check-out” for recommended cleaners.

2. Make sure that the system is tight - This is the single most important guideline. Tap water contains dissolved oxygen which causes corrosion. In a tight system, this oxygen comes out of solution and is quickly removed from the system through the automatic air vent. The system then remains essentially free of oxygen. If the system is not tight, however, frequent additions of make-up water can expose the heat exchanger to oxygen on a continuous basis. In addition, frequent additions of hard make-up water can cause calcium deposits to collect in the heat exchanger, causing severe damage. To minimize additions of make-up water:

   - Inspect the system thoroughly for leaks before placing it in service.
   - If the system includes underground piping, or other piping in which a leak might go undetected, consider isolating the boiler from the system with a heat exchanger.
   - Make sure that the expansion tank is properly sized and in good condition. If it is not, the relief valve may open frequently, resulting in regular additions of make-up water.
   - If an automatic fill valve is installed, installation of a water meter in the fill line is strongly recommended so that routine additions of make-up water can be detected and their cause corrected.

3. Non-Metallic Tubing - Even if the system is tight, oxygen can be introduced into the system through some types of non-metallic tubing used in radiant or snow melt systems. Other nonmetallic tubing is equipped with an oxygen barrier to prevent migration of oxygen into the water. If the boiler is to be installed in a system containing non-metallic tubing without an oxygen barrier, it must be isolated from the boiler with a heat exchanger as shown in Figure 9.10.

4. Water Chemistry, Antifreeze, and Boiler Water Additives – Improper boiler water chemistry can cause the heat exchanger damage described above, as well as deterioration of seals. Observe the water chemistry requirements shown in Section XI “Start-up and Check-out”.

B. Standard Piping Installation Requirements

Observe the following requirements when installing the boiler piping:

1) Relief Valve (Required) – The relief valve is shipped loose and must be installed in the location shown in Figure 9.1. ASME Section IV currently requires that this relief valve be installed above the heat exchanger as shown. Pipe the outlet of the relief valve to a location where water or stream will not create a hazard or cause property damage if the valve opens. The end of the discharge pipe must terminate in unthreaded pipe. If the relief valve discharge is not piped to a drain, it must terminate at least 6" above the floor. Do not run the discharge piping through an area that is prone to freezing. The termination of the relief valve must be in an area where it is not likely to become plugged by debris.

   The relief valve supplied with the boiler is set to open at 30 psi. If it is replaced, the replacement must have a setting less than or equal to the maximum allowable working pressure (MAWP) shown on the ASME data plate located on front of heat exchanger.

DANGER

Explosion / Scald Hazard.

Pipe relief valve discharge to a location where the potential of severe burns is eliminated.

Do not install a relief valve having a setting greater than the MAWP shown on the rating plate.

Do not install a valve in the relief valve discharge line.

Do not install relief valve in a location other than that specified by the factory.

Do not plug the relief valve discharge.

Do not install a valve between boiler and relief valve.

2) Gauge (Required) - Indicates supply water pressure and temperature. This gauge is shipped loose. Install it as shown in Figure 9.1.

3) Circulator (required) – A boiler loop circulator is required to maintain flow through boiler. Usually at least one additional circulator (not supplied) will be required for the system to work properly. See next section for more information.

4) Expansion Tank (required) – If this boiler is replacing an existing boiler with no other changes in the system, the old expansion tank can generally be reused. If the expansion tank must be replaced, consult the expansion tank manufacturer's literature for proper sizing. If using antifreeze, account for additional expansion of glycol solution when sizing an expansion tank. In a typical residential heating system, a glycol mixture has an expansion rate about 1.2 times that of water alone, therefore a tank for an anti-freeze system should be at least 1.2 times greater in size.

5) Fill Valve (required) – Either a manual or automatic fill valve may be used, but a manual valve is preferred because it eliminates unmonitored additions of make-up water to the system. The ideal location for the fill valve is at the expansion tank. If using antifreeze with automatic fill valve, it is recommended to install a water meter to monitor makeup water. Antifreeze concentration will decrease as makeup water is added. If using antifreeze, local codes often require a backflow preventer or disconnect from city water.

6) Automatic Air Vent (required) – At least one automatic air vent is required. Manual air vents will usually be required in other parts of the system to remove air during initial fill.

7) Manual Reset High Limit (required by some codes) - This control is required by ASME CSD-1 and some other codes. Install the high limit in the boiler supply piping just above the boiler with no intervening valves. Set the manual reset high limit to 200°F. Wire the limit per Figure 10.3 in Section X "Wiring".

8) Isolation Valves (recommended) - Isolation valves are useful when the boiler must be drained, as they will eliminate having to drain and refill the entire system.

9) Strainer (recommended) – Install a Y Strainer, or other suitable strainer, to prevent any system debris from entering the boiler and fouling the water passages. Note that some strainers have a significant pressure drop, which may impact the ability of the boiler pump to obtain the required flow. See Paragraph B of this section for additional information.

10) Drain Valve (required) – Install the drain valve supplied as shown in Figure 9.1.

CAUTION

Do not reverse supply/inlet and return/outlet piping. Reverse piping will cause premature heat exchanger failure. Positively assure supply/inlet and return/outlet pipes are properly connected as shown in this manual.

NOTICE

For combi model RPTR155CB, only the inlet bottom/outlet bottom piping configuration may be used. Refer to Appendix B for combi piping.

INLET BOTTOM/OUTLET BOTTOM

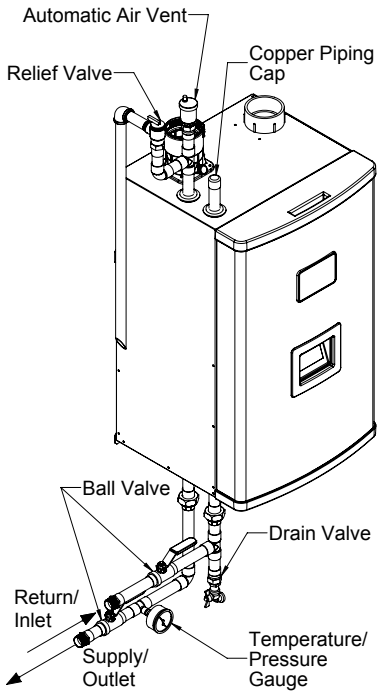

INLET BOTTOM/OUTLET TOP

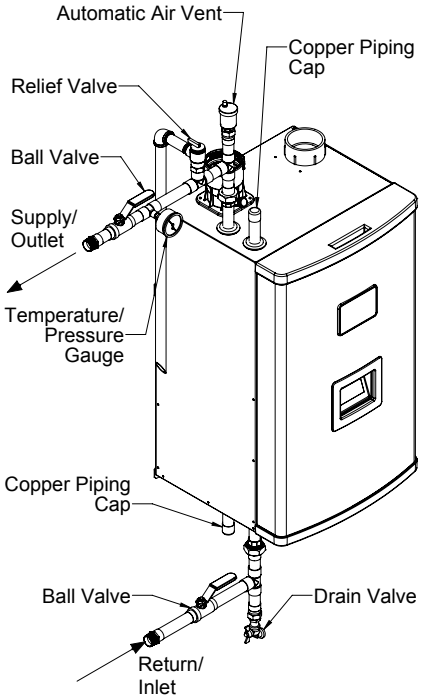

INLET TOP/OUTLET BOTTOM

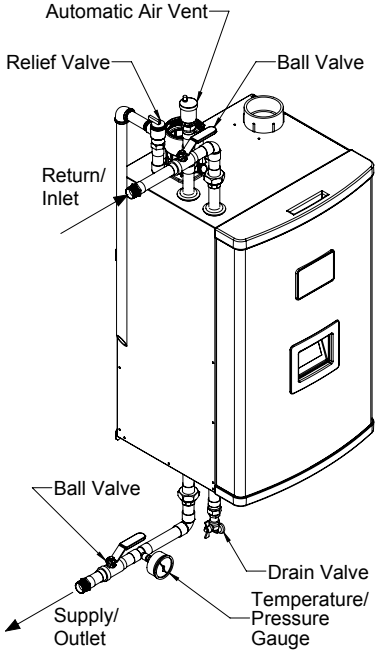

INLET TOP/OUTLET TOP

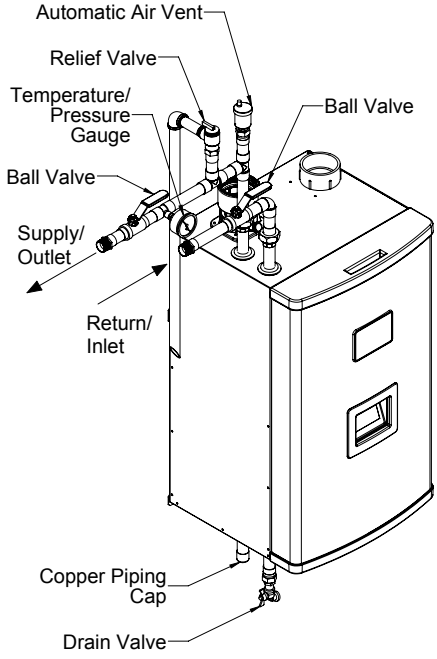

Figure 9.1: Near Boiler Piping

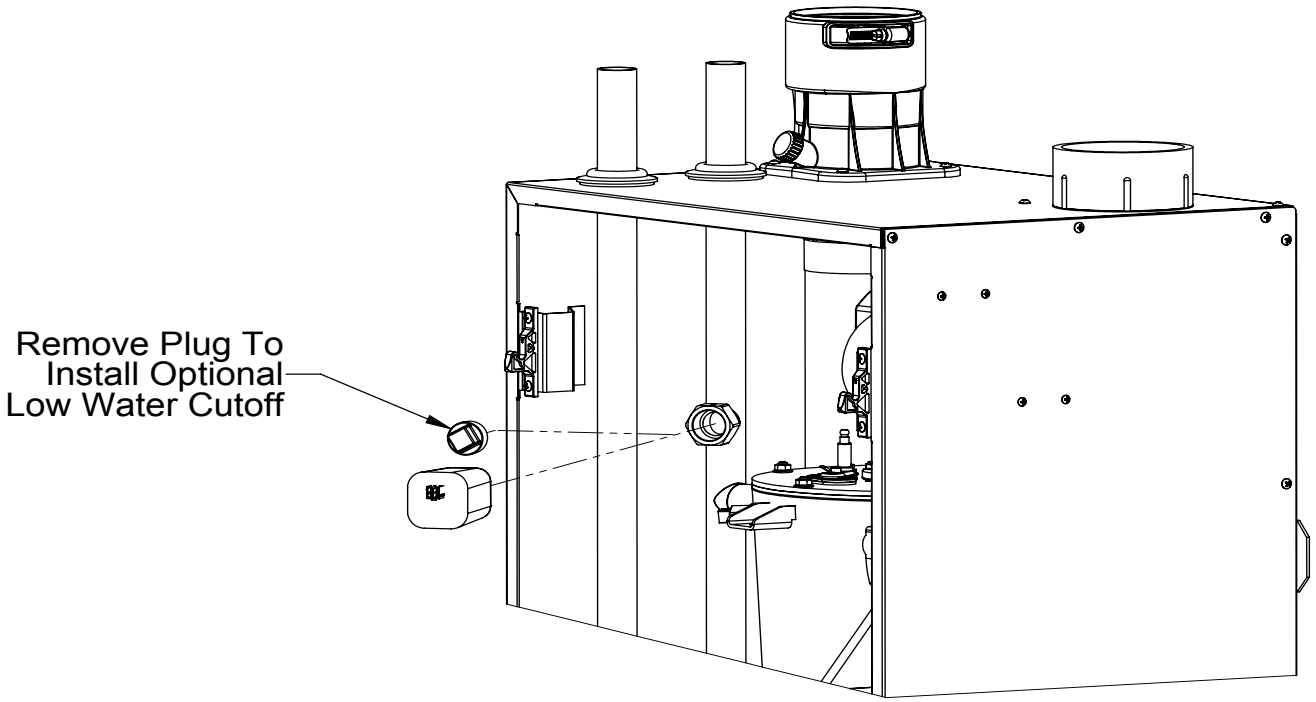

Figure 9.2: LWCO Location

C. Near Boiler Piping Design

Proper operation of this boiler requires that the water flow rate through it remain within the limits shown in Table 9.3 any time the boiler is firing. At flow rates below the minimum shown, the boiler's temperature rise limit function may prevent the boiler from firing. Flow rates through the boiler in excess of the maximum shown in Table 9.3 can result in excessive noise or erosion damage to piping.

There are two basic methods that can be used to pipe this boiler into the system. Method #1 (primary-secondary piping) is always preferred. Additional information on hydronic system design can be found in the *I=B=R* Guide RHH published by the Air-Conditioning, Heating and Refrigeration Institute (AHRI).

Table 9.3: Flow Limitations

Boiler Model	Min. Pipe Size (in.)	ΔT = 35°F		ΔT = 30°F		ΔT = 25°F		ΔT = 20°F	
		Min. Flow (GPM)	Boiler Head Loss (ft)	Flow (GPM)	Boiler Head Loss (ft)	Flow (GPM)	Boiler Head Loss (ft)	Max. Flow (GPM)	Boiler Head Loss (ft)
RPTR85HB	1	4.5	0.5	5.3	0.6	6.3	0.9	7.9	1.2
RPTR110HB	1	5.8	0.8	6.8	1.0	8.2	1.3	10.2	2.0
RPTR155HB	1	8.2	1.3	9.6	1.8	11.5	2.5	14.4	3.7
RPTR155CB	1	8.2	3.5	9.6	4.8	11.5	7.1	14.4	11.2
RPTR205HB	1¼	10.9	0.8	12.7	1.0	15.3	1.4	19.1	2.0
RPTR270HB	1¼	14.3	1.4	16.7	1.8	20.1	2.5	25.1	3.8

Method 1: Primary/Secondary Piping (Strongly Recommended)

This method can be used in heat-only applications as shown in Figure 9.7a or 9.8a or with an indirect water heater as shown in Figure 9.7b, 9.7c, 9.8b, 9.8c. In this system, the flow rate through the boiler ("secondary loop") is completely independent of the flow rate through the system ("primary loop"). Use the following guidelines to ensure that the boiler will have the required flow shown in Table 9.3 regardless of the flow in the heating system.

1) System Loop Piping - Size the system circulator and piping to obtain the design flow rate through the heating system as you would on any other heating system. All piping between the expansion tank and secondary connection tees must be at least 1". In order to keep the flow rates in the system and boiler loops independent of each other, provide at least 8 diameters of straight pipe upstream of the first tee and 4 diameters downstream of the second tee. Keep the distance between the expansion tank and the first secondary tee as short as practical.

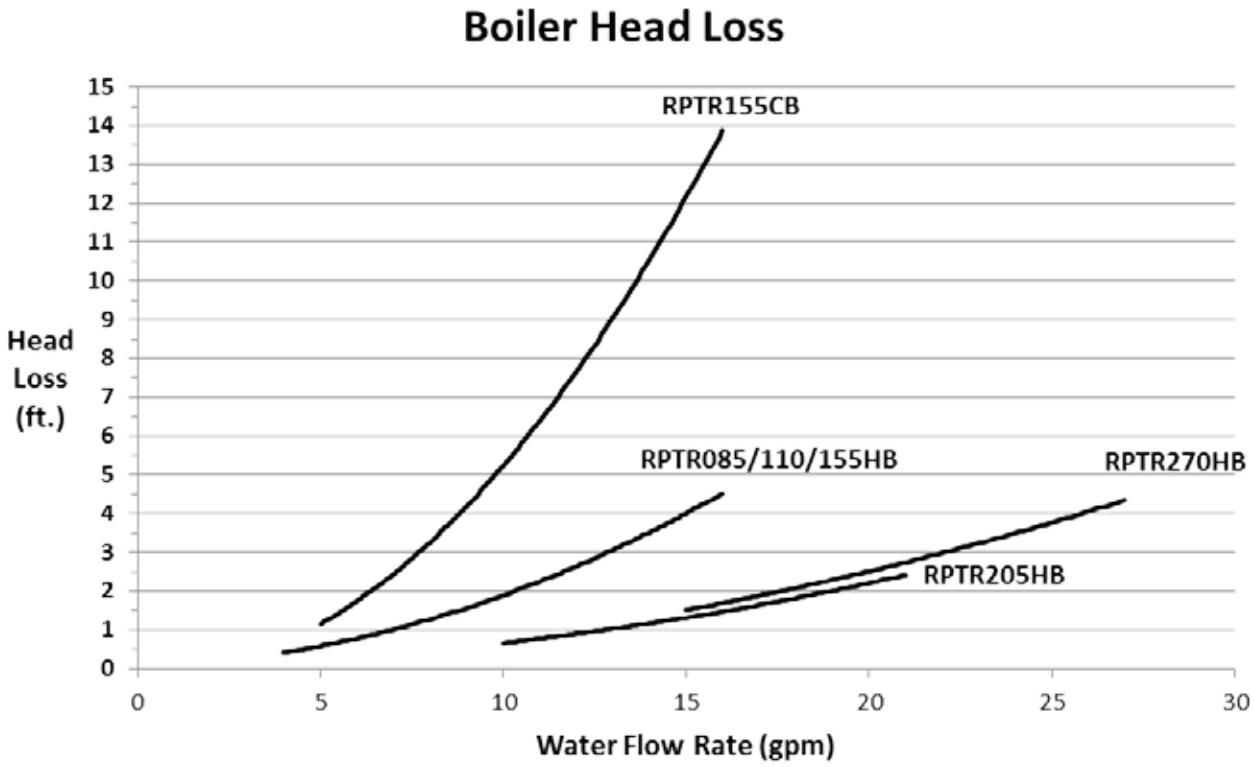

Figure 9.4: Boiler Head Loss

2) Boiler Loop Piping – Size boiler circulator to maintain flow requirements listed in Table 9.3. Boiler head loss is provided in Figure 9.4. Recommended circulators for 60 equivalent feet of boiler loop piping are listed in Table 9.5a and Table 9.5b.

   NOTICE: Use of antifreeze increases boiler and system head loss and may require larger circulators. Consult antifreeze manufacturer for proper antifreeze concentration and head loss calculation.

Table 9.5a: Recommended Taco Circulators for 60 Equivalent ft. Boiler Loop Piping

Boiler Model	Minimum Pipe Size (in.)	ΔT = 35°F			ΔT = 30°F			ΔT = 25°F			ΔT = 20°F		
		Flow (GPM)	Boiler & Piping Head Loss (ft)	Circulator Model	Flow (GPM)	Boiler & Piping Head Loss (ft)	Circulator Model	Flow (GPM)	Boiler & Piping Head Loss (ft)	Circulator Model	Flow (GPM)	Boiler & Piping Head Loss (ft)	Circulator Model
RPTR85HB	1	4.5	1.5	007/007e	5.3	1.9	007/007e	6.3	2.6	007/007e	7.9	3.9	007
RPTR110HB	1	5.8	2.3	007/007e	6.8	3.0	007/007e	8.2	4.2	007/007e	10.2	6.3	007
RPTR155HB	1	8.2	4.2	007/007e	9.6	5.6	007/007e	11.5	7.8	0010	14.4	11.9	0011
RPTR155CB	1	8.2	6.4	007/007e	9.6	8.7	0010	11.5	12.4	0011	14.4	19.3	0013
RPTR205HB	1¼	10.9	2.0	007/007e	12.7	2.7	007/007e	15.3	3.7	0010	19.1	5.6	0011
RPTR270HB	1¼	14.3	3.5	0010	16.7	4.6	0010	20.1	6.4	0011	25.1	9.7	0013

Table 9.5b: Recommended Grundfos Circulators for 60 Equivalent ft. Boiler Loop Piping

Boiler Model	Minimum Pipe Size (in.)	ΔT = 35°F			ΔT = 30°F			ΔT = 25°F			ΔT = 20°F		
		Flow (GPM)	Boiler & Piping Head Loss (ft)	Circulator Model	Flow (GPM)	Boiler & Piping Head Loss (ft)	Circulator Model	Flow (GPM)	Boiler & Piping Head Loss (ft)	Circulator Model	Flow (GPM)	Boiler & Piping Head Loss (ft)	Circulator Model
RPTR85HB	1	4.5	1.5	UPS 15-58, Spd. 1	5.3	1.9	UPS 15-58, Spd. 1	6.3	2.6	UPS 15-58, Spd. 1	7.9	3.9	UPS 15-58, Spd. 2
RPTR110HB	1	5.8	2.3	UPS 15-58, Spd. 1	6.8	3.0	UPS 15-58, Spd. 1	8.2	4.2	UPS 15-58, Spd. 2	10.2	6.3	UPS 15-58, Spd. 3
RPTR155HB	1	8.2	4.2	UPS 15-58, Spd. 2	9.6	5.6	UPS 15-58, Spd. 2	11.5	7.8	UPS 15-58, Spd. 3	14.4	11.9	UPS 26-99, Spd. 2
RPTR155CB	1	8.2	6.4	UPS 15-58, Spd. 2	9.6	8.7	UPS 15-58, Spd. 3	11.5	12.4	UPS 26-99, Spd. 2	14.4	19.3	UPS 26-99, Spd. 3
RPTR205HB	1¼	10.9	2.0	UPS 15-58, Spd. 2	12.7	2.7	UPS 15-58, Spd. 2	15.3	3.7	UPS 26-99, Spd. 1	19.1	5.6	UPS 26-99, Spd. 2
RPTR270HB	1¼	14.3	3.5	UPS 26-99, Spd. 1	16.7	4.6	UPS 26-99, Spd. 2	20.1	6.4	UPS 26-99, Spd. 2	25.1	9.7	UPS 26-99, Spd. 3

3) Indirect Water Heater Loop Piping – If an indirect water heater is used, install it as shown in Figure 9.7b, 9.7c, 9.8b, 9.8c. Refer to the indirect water heater installation manual for the proper sizing the indirect water heater loop pump and piping.

4) Hydraulic Separators – Hydraulic separators serve the same purpose as the closely spaced tees connecting the boiler and system loops. They also generally provide effective connection points for automatic air elimination devices and an expansion tank. These separators are available from several sources and may be used in place of the closely spaced tees. Select a hydraulic separator having 1" or larger boiler connections that is designed for the boiler flow rates shown in Table 9.3.

Table 9.6: Fitting and Valve Equivalent Length

Copper Fitting and Sweat Valve Equivalent Length (Ft)				
Fitting or Valve Description	**Copper Pipe or Valve Size**			
	1	**1¼**	**1½**	**2**
90° Elbow	2.5	3.0	4.0	5.5
45° Elbow	1.0	1.2	1.5	2.0
Tee (through flow)	0.5	0.6	0.8	1.0
Tee (Branch flow)	4.5	5.5	7.0	9.0
Diverter Tee (typical)	23.5	25.0	23.0	23.0
Gate Valve	0.3	0.4	0.5	0.7
Globe Valve	25.0	36.0	46.0	56.0
Angle Valve	5.3	7.8	9.4	12.5
Ball Valve (standard port)	4.3	7.0	6.6	14.0
Ball Valve (full port)	1.9	1.4	2.2	1.3
Y-Strainer*	7.0			
Swing Check Valve	4.5	5.5	6.5	9.0
Flow-Check Valve (typical)	54.0	74.0	57.0	177.0
Butterfly Valve	2.7	2.0	2.7	4.5

* Based on Cv of 20. Pressure drop through strainers varies widely. 7 ft. equivalent+ length may be assumed for strainers having a published Cv greater than 10.

NOTE: Table 9.3 is provided as reference to assist in piping design and specifies equivalent length of typical piping fittings and valves.

IX. System Piping (continued)

A. At least eight pipe diameters upstream of first tee.
B. No further apart than 12" (~30 cm) or four pipe diameters, whichever is smaller.
C. At least 18" (~46 cm) of straight pipe for Conventional Air Scoop.

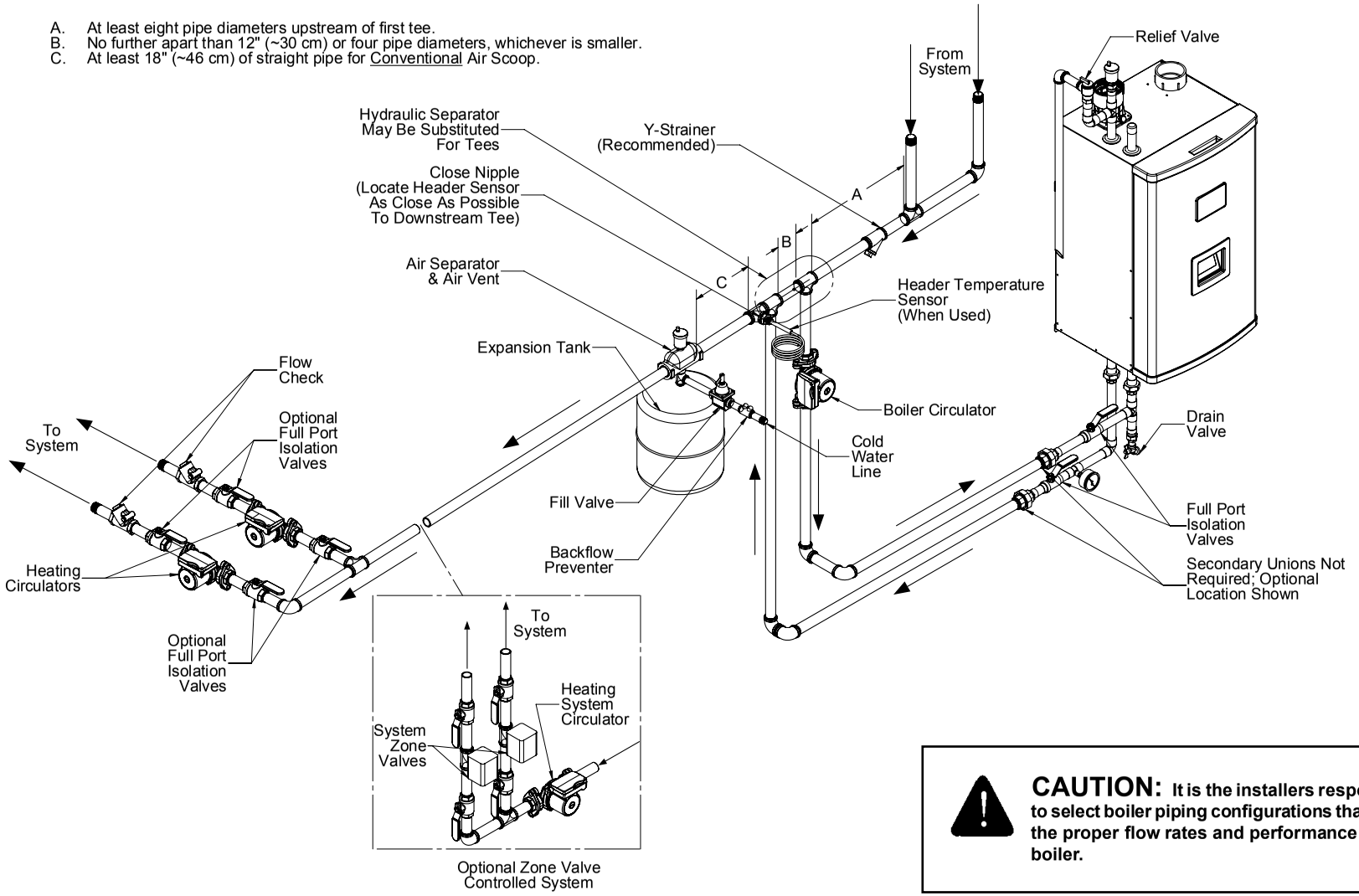

CAUTION: **It is the installers responsibility to select boiler piping configurations that provide the proper flow rates and performance for the boiler.**

Figure 9.7a: Piping Method #1 - Near Boiler Piping; Heating Only
HX Inlet Bottom Connection; HX Outlet Bottom Connection

IX. System Piping (continued)

A. At least eight pipe diameters upstream of first tee.
B. No further apart than 12" (~30 cm) or four pipe diameters, whichever is smaller.
C. At least 18" (~46 cm) of straight pipe for Conventional Air Scoop.

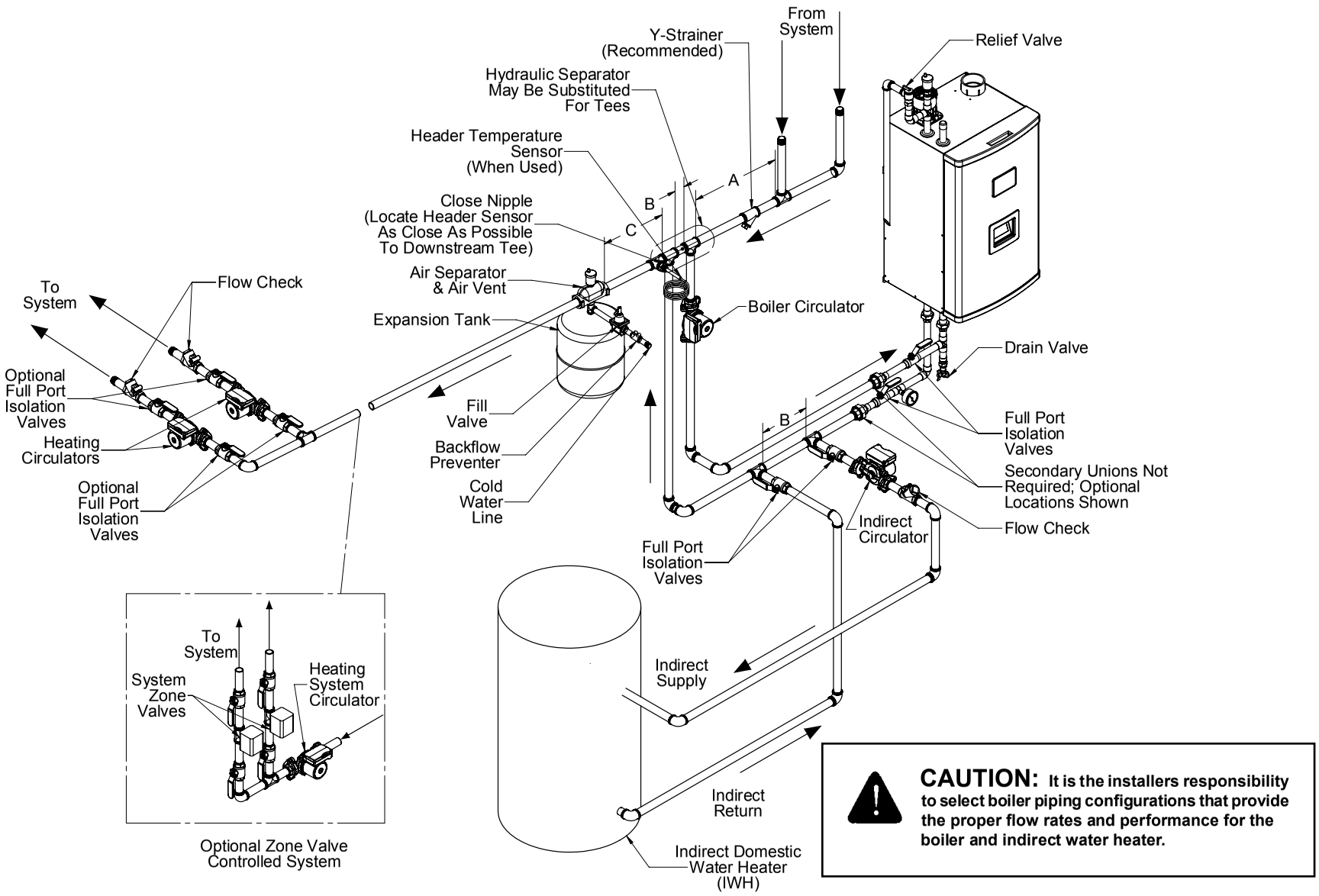

Figure 9.7b: Piping Method #1 - Near Boiler Piping - Heating Plus Supply Piped Indirect Water Heater HX Inlet Bottom Connection; HX Outlet Bottom Connection

A. At least eight pipe diameters upstream of first tee.
B. No further apart than 12" (~30 cm) or four pipe diameters, whichever is smaller.
C. At least 18" (~46 cm) of straight pipe for Conventional Air Scoop.

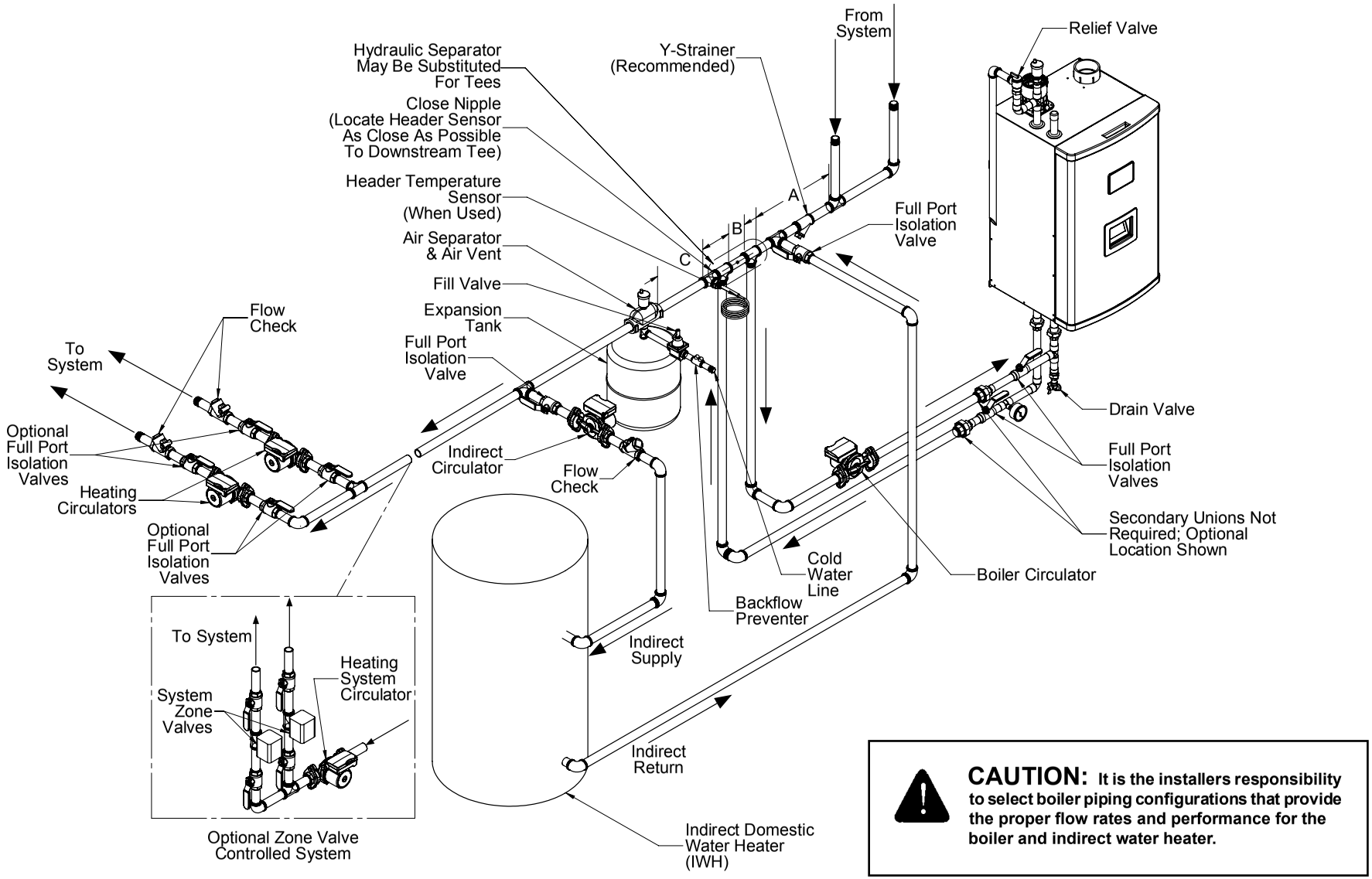

Figure 9.7c: Piping Method #1 - Near Boiler Piping - Heating Plus System Piped Indirect Water Heater HX Inlet Bottom Connection; HX Outlet Bottom Connection

IX. System Piping (continued)

A. At least eight pipe diameters upstream of first tee.
B. No further apart than 12" (~30 cm) or four pipe diameters, whichever is smaller.
C. At least 18" (~46 cm) of straight pipe for Conventional Air Scoop.

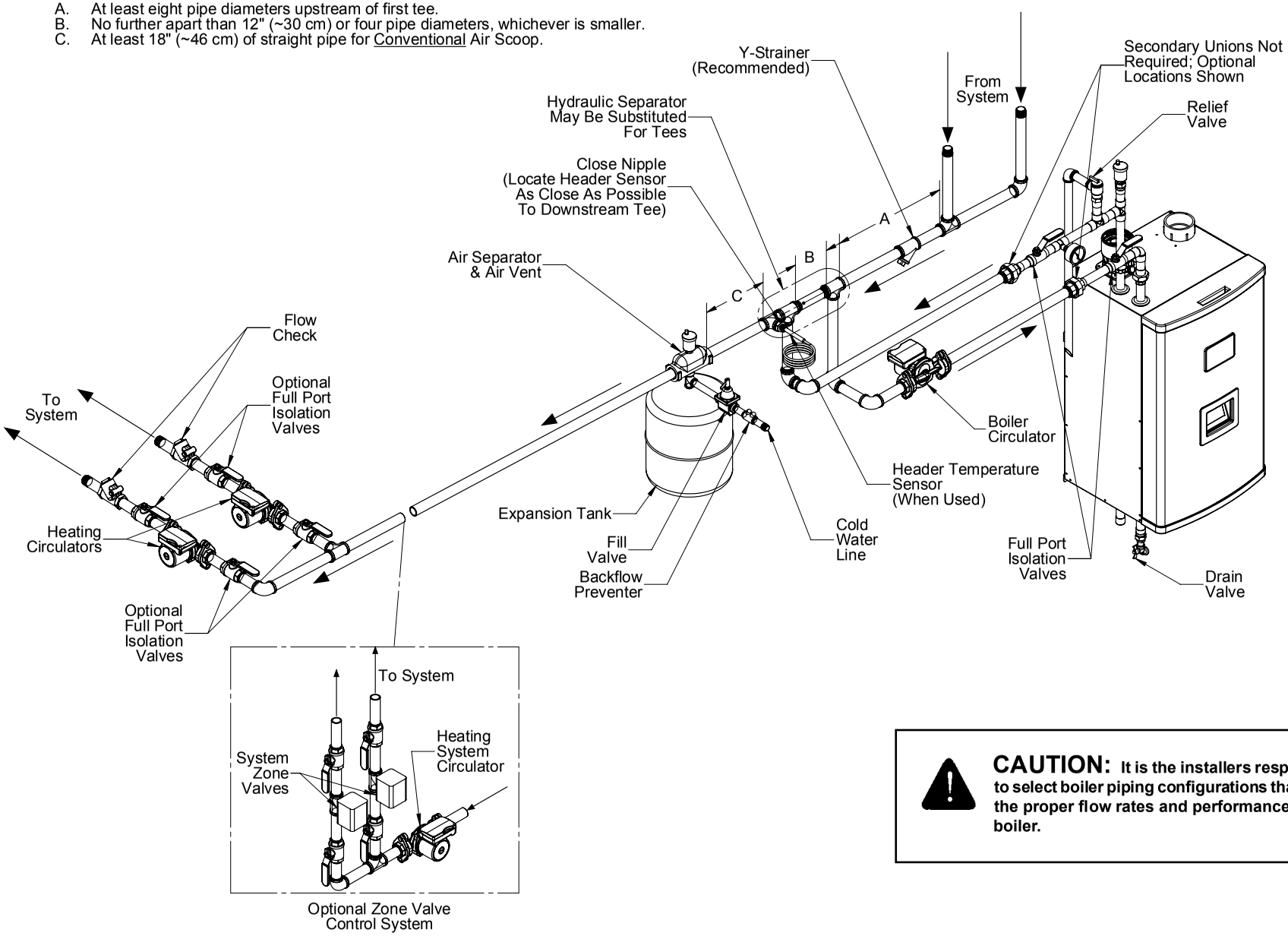

CAUTION: **It is the installers responsibility to select boiler piping configurations that provide the proper flow rates and performance for the boiler.**

Figure 9.8a: Piping Method #1 - Near Boiler Piping - Heating Only
HX Inlet Top Connection; HX Outlet Top Connection

A. At least eight pipe diameters upstream of first tee.
B. No further apart than 12" (~30 cm) or four pipe diameters, whichever is smaller
C. At least 18" (~46 cm) of straight pipe for Conventional Air Scoop.

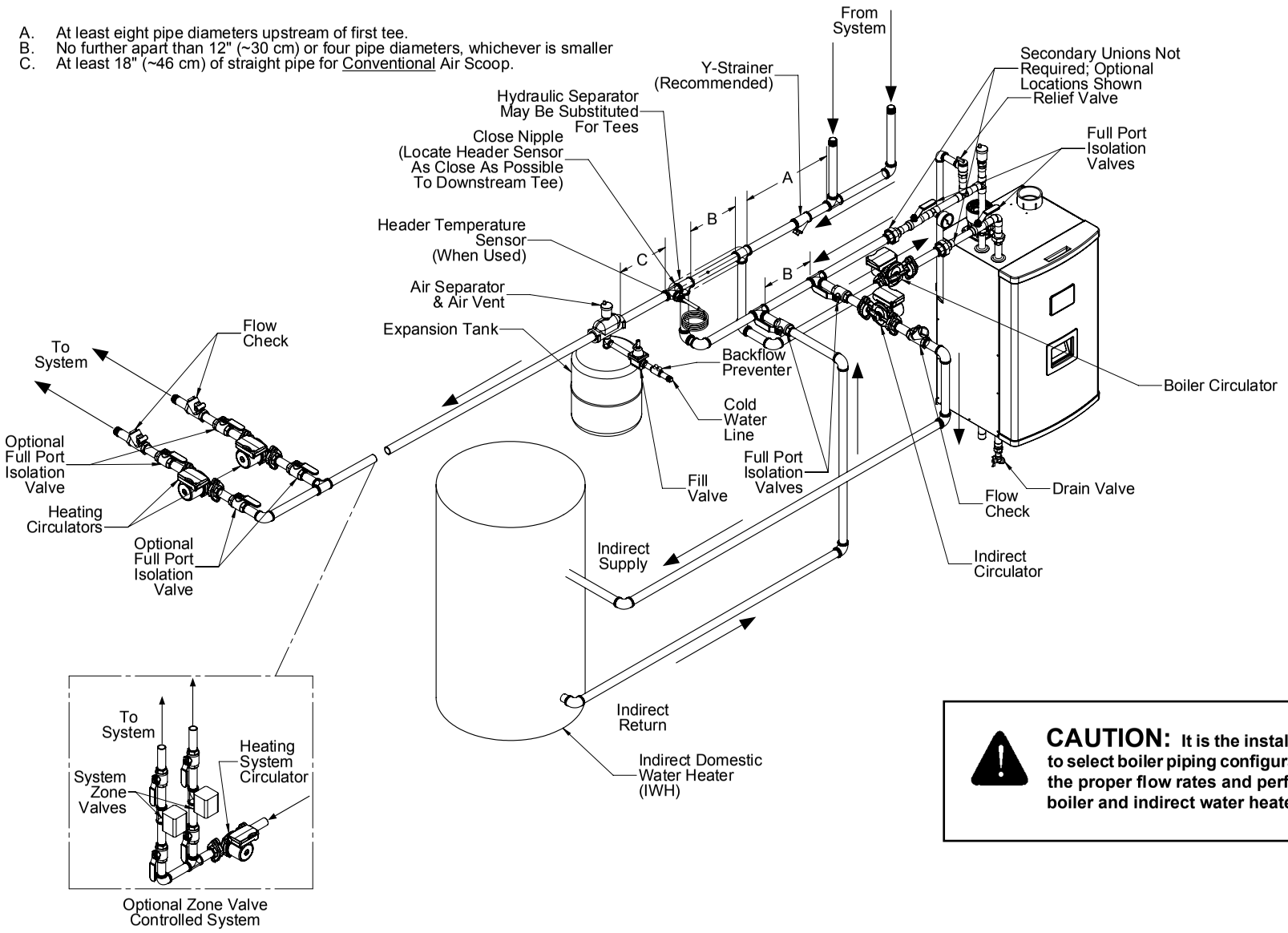

CAUTION: **It is the installers responsibility to select boiler piping configurations that provide the proper flow rates and performance for the boiler and indirect water heater.**

Figure 9.8b: Piping Method #1 - Near Boiler Piping - Heating Plus Supply Piped Indirect Water Heater HX Inlet Top Connection; HX Outlet Top Connection

IX. System Piping (continued)

A. At least eight pipe diameters upstream of first tee.
B. No further apart than 12" (~30 cm) or four pipe diameters, whichever is smaller.
C. At least 18" (~46 cm) of straight pipe for Conventional Air Scoop.

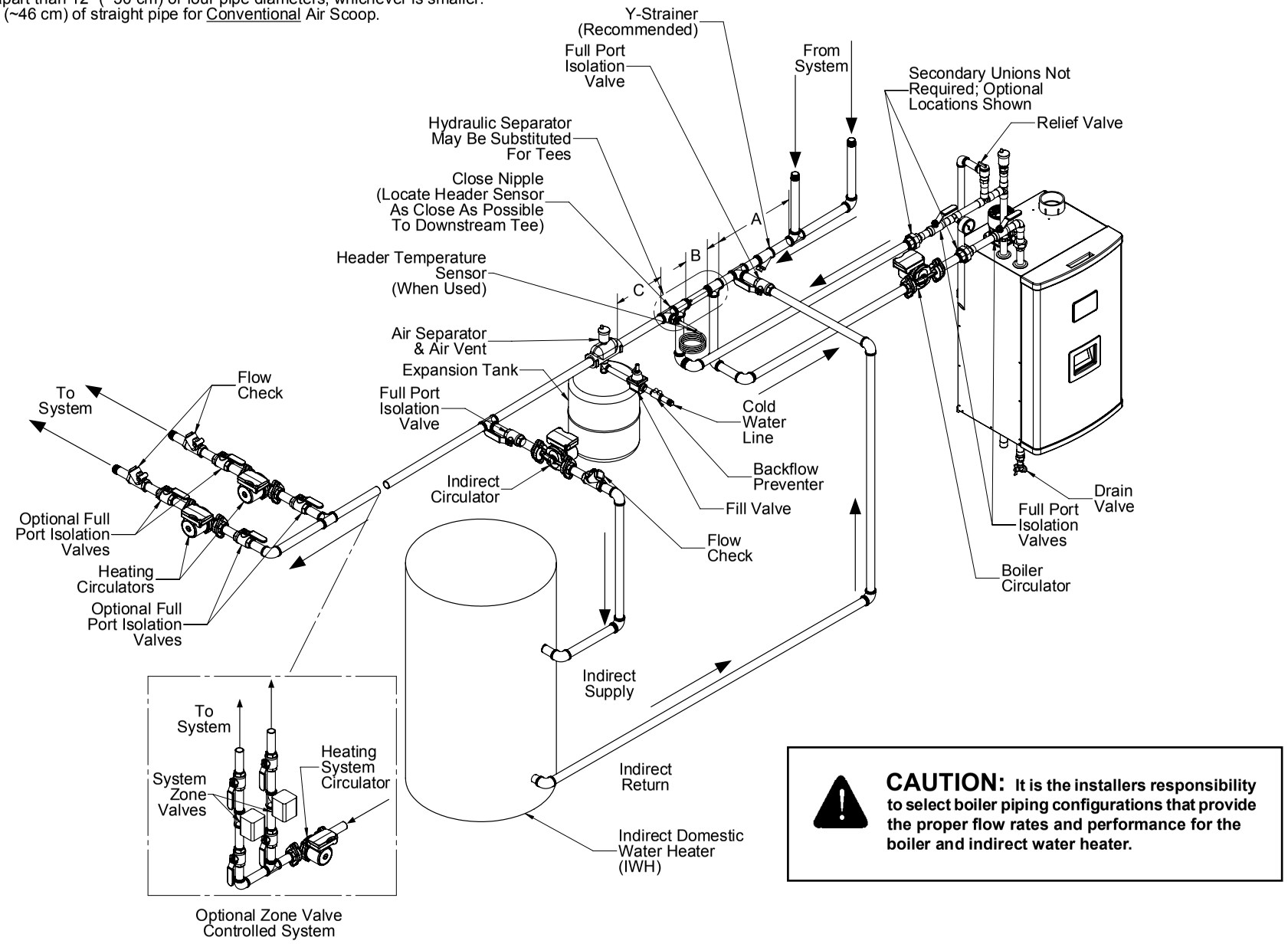

CAUTION: It is the installers responsibility to select boiler piping configurations that provide the proper flow rates and performance for the boiler and indirect water heater.

Figure 9.8c: Piping Method #1 - Near Boiler Piping - Heating Plus System Piped Indirect Water Heater HX Inlet Top Connection; HX Outlet Top Connection

IX. System Piping (continued)

A. At least eight pipe diameters upstream of first tee.
B. No further apart than 12" (~30cm) or four pipe diameters, whichever is smaller.
C. At least 18" (~46cm) of straight pipe for Conventional Air Scoop.

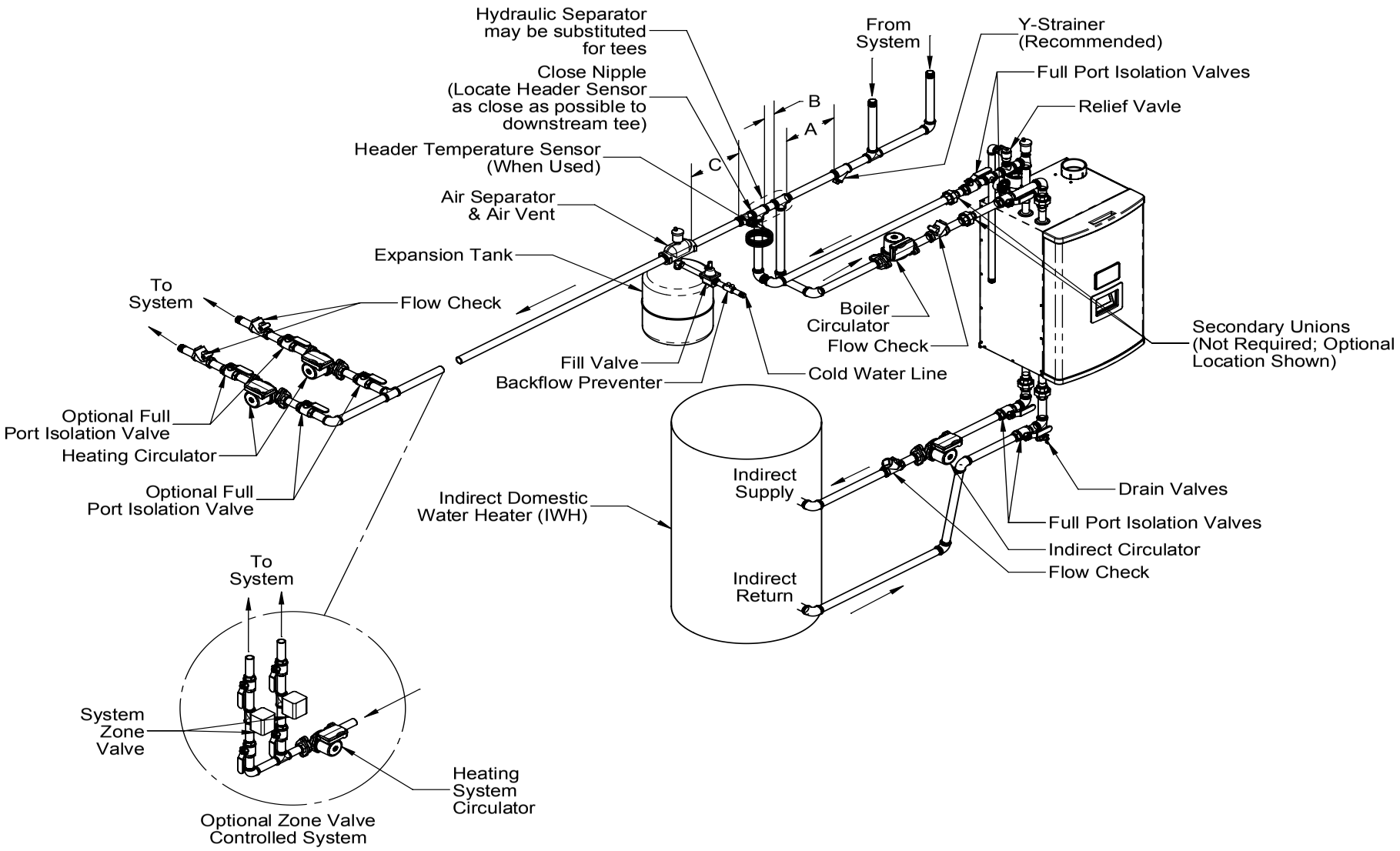

Figure 9.8d: Piping Method #1 - Near Boiler Piping - Heating Plus Indirect Water Heater System Piping Top Connection; Indirect Water Heater Bottom Connection

Method 2: Direct Connection to Heating System (Generally NOT Recommended)

In some cases it may be possible to connect this boiler directly to the heating system as is done with conventional boilers (Figure 9.9). If this is done, the flow rate through the boiler will equal the flow rate through the system. The flow rate through the system must therefore always remain within the limits shown in Table 9.3. For this reason, the pressure drop through the entire system must be known.

This method is generally not recommended because it is often very difficult to accurately calculate the pressure drop through the system. In replacement installations, it may be impossible to get an accurate measurement of the amount of piping and number of fittings in the system. In addition, if the system is zoned, the system flow may drop well below the minimum required when only one zone is calling for heat.

The one advantage to this method is its installation simplicity. It may make sense to use this method when the boiler is to be installed with a new single zone system having a low-pressure drop.

Calculation of the system pressure drop must be performed by someone having familiarity with pressure drop calculations, such as an HVAC engineer.

NOTICE

Where it is not possible to install a separate boiler loop, the system circulator must be sized to ensure that the flow through the boiler stays within the defined parameters to prevent overheating when the boiler is fired at it's full rated input. Install a flow meter to measure the flow, or fire the boiler at full rate and ensure the boiler delta T does not exceed 35°F (19°C).

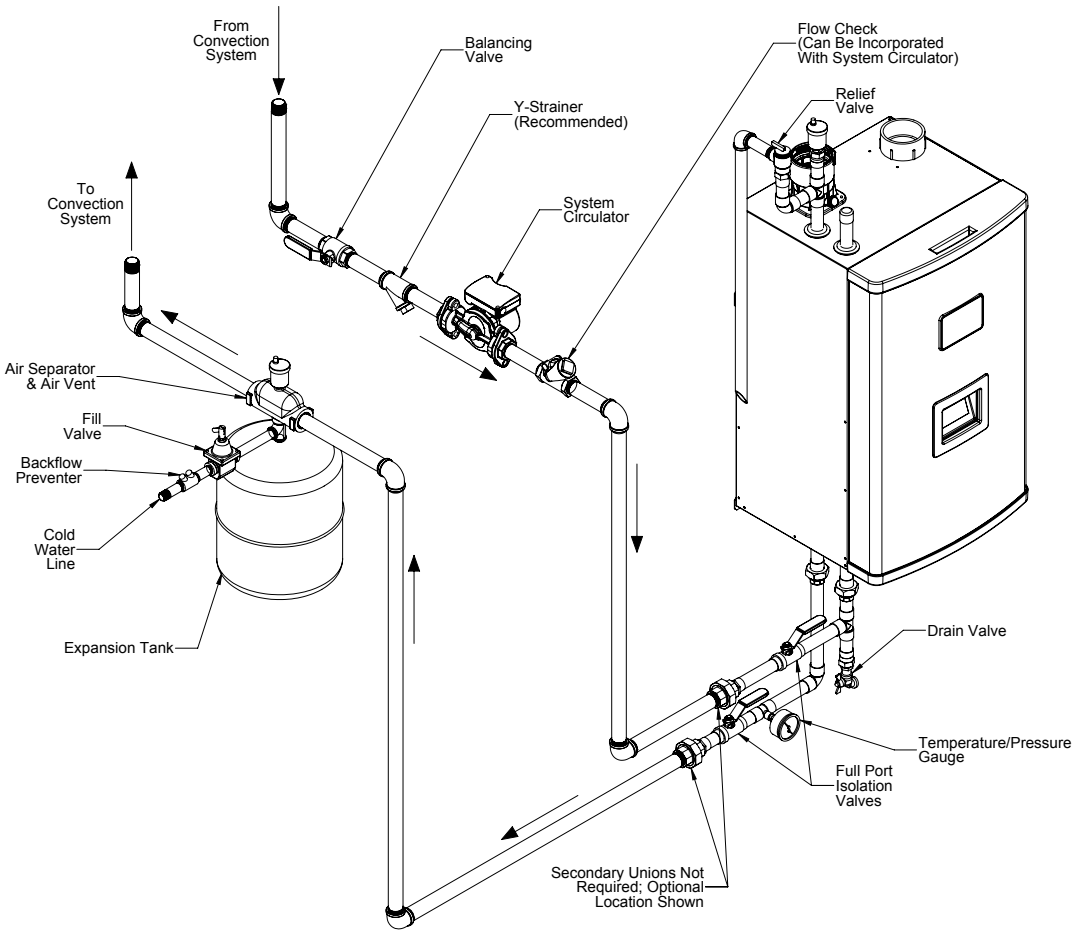

Figure 9.9a: Piping Method #2: Direct Connection of Boiler to Heating System

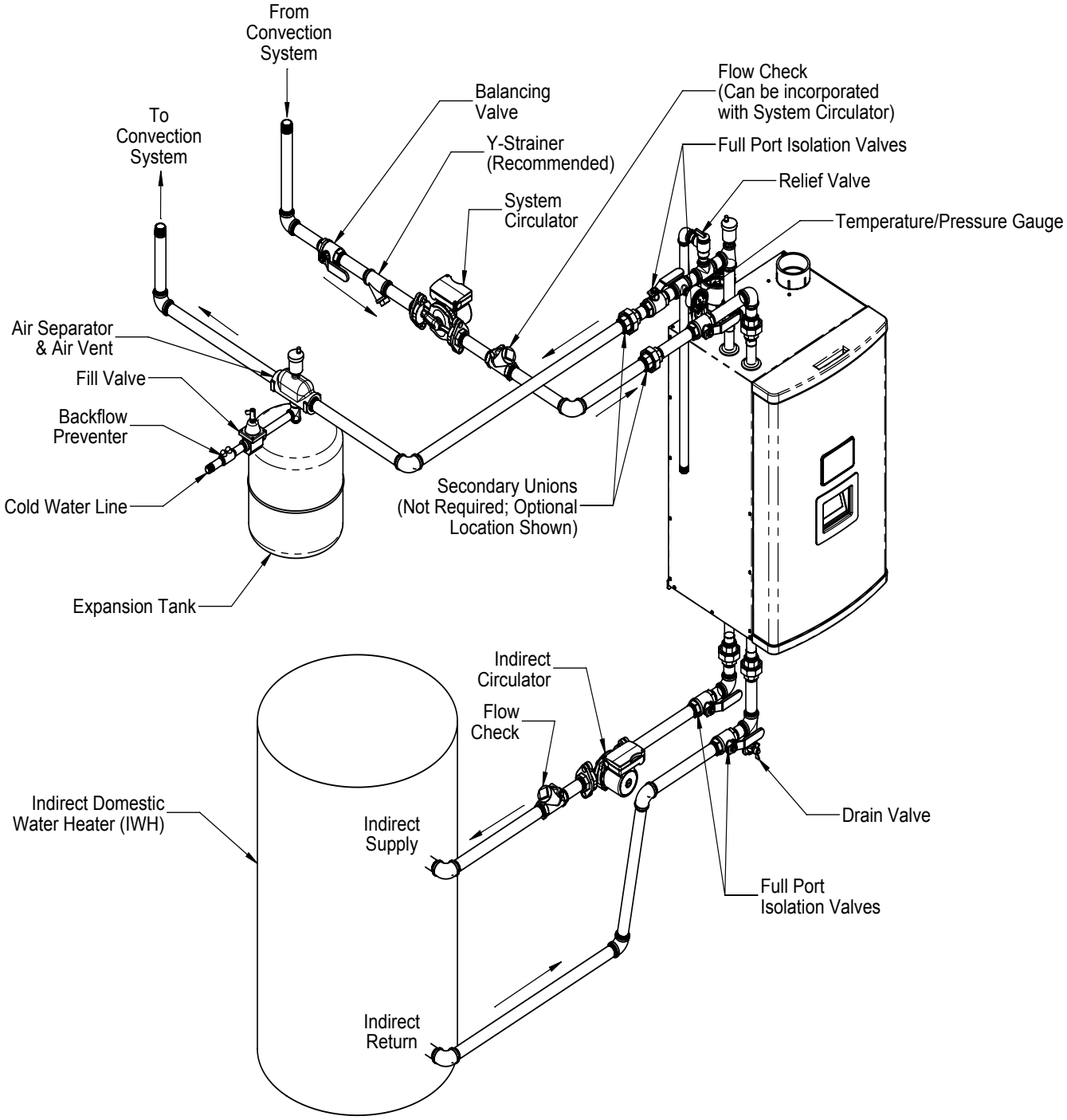

Figure 9.9b: Piping Method #2: Direct Connection of Boiler to Heating Top and Boiler to Indirect Water Heater Bottom

D. Piping for Special Situations

1) Systems containing oxygen - Many hydronic systems contain enough dissolved oxygen to cause severe corrosion damage to a this boiler. Some examples include:

   - Radiant systems that employ tubing without an oxygen barrier.
   - Systems with routine additions of fresh water.
   - Systems which are open to the atmosphere.

   If the boiler is to be used in such a system, it must be separated from the oxygenated water being heated with a heat exchanger as shown in Figure 9.10. Consult the heat exchanger manufacturer for proper heat exchanger sizing as well as flow and temperature requirements. All components on the oxygenated side of the heat exchanger, such as the pump and expansion tank, must be designed for use in oxygenated water.

2) Piping with a Chiller - If the boiler is used in conjunction with a chiller, pipe the boiler and chiller in parallel. Use isolation valves to prevent chilled water from entering the boiler.

3) Air Handlers - Where the boiler is connected to air handlers through which refrigerated air passes, use flow control valves in the boiler piping or other automatic means to prevent gravity circulation during the cooling cycle.

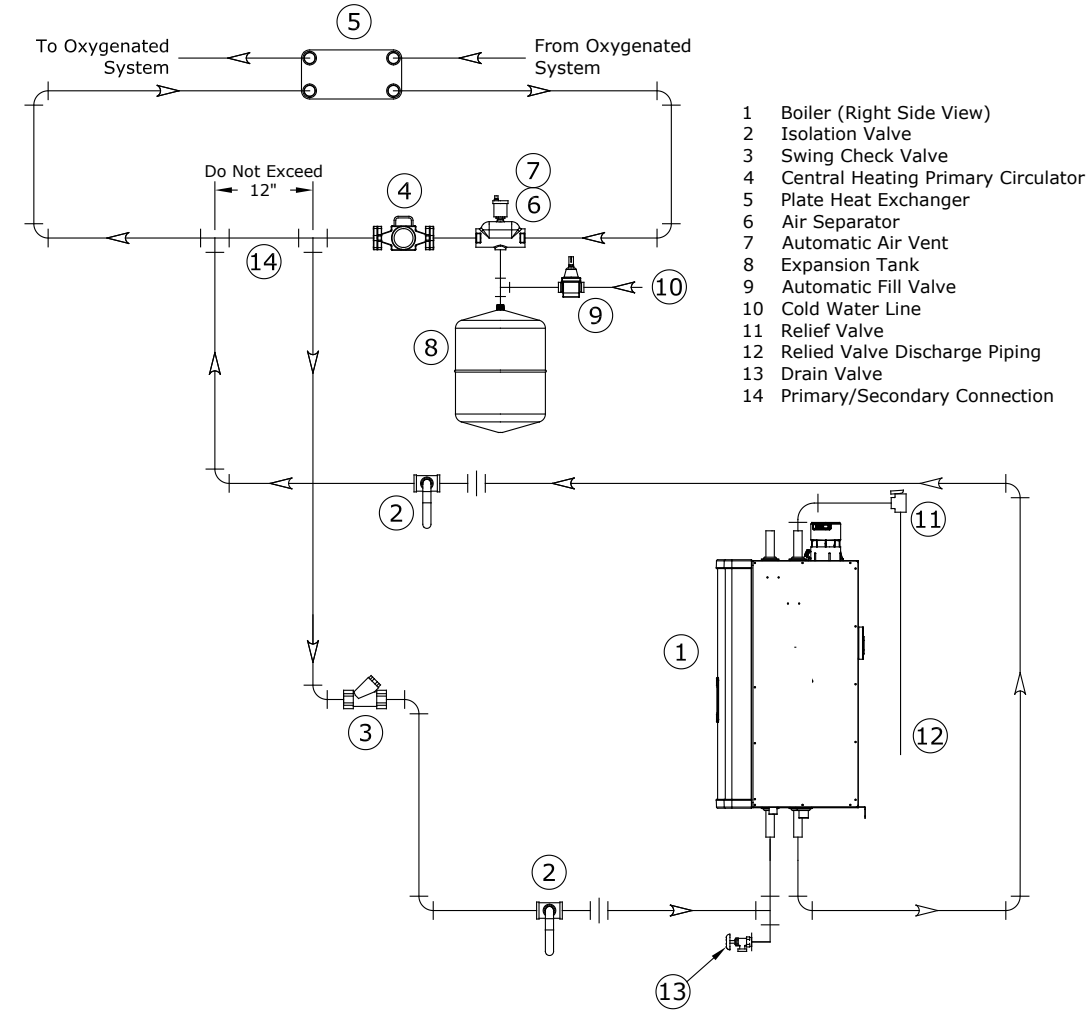

Figure 9.10: Isolation of the Boiler from Oxygenated Water with a Plate Heat Exchanger

X. Wiring

DANGER

Electrical Shock Hazard. Positively assure all electrical connections are unpowered before attempting installation or service of electrical components or connections of the boiler or building. Lock out all electrical boxes with padlock once power is turned off.

WARNING

All wiring and grounding must be done in accordance with the authority having jurisdiction or, in the absence of such requirements, with the National Electrical Code /NFPA 70). In Canada, all wiring and grounding must be done in accordance with the Canadian Electrical Code, Part 1 (CSA C22.1 - latest edition).

Failure to properly wire electrical connections to the boiler may result in serious physical harm.

Electrical power may be suppled from more than one circuit. Make sure all power is off before attempting any electrical work.

Each boiler must be protected with a properly sized over-current device.

Never jump out or make inoperative any safety or operating controls.

The wiring diagrams contained in this manual are for reference purposes only. Each boiler is shipped with a wiring diagram attached to the front door. Refer to this diagram and the wiring diagram of any controls used with the boiler. Read, understand and follow all wiring instructions supplied with the controls.

NOTICE

This boiler is equipped with a listed high water temperature limit function. This limit provides boiler shutdown in the event the boiler water temperature exceeds the set point of the limit control. Certain Local Codes require an additional water temperature limit. If necessary, install an additional water temperature limit such as a Honeywell L4006 Aquastat. Wire as indicated in Figure 10.3.

Figure 10.1 shows the location of both the high voltage and low voltage printed circuit boards with terminal strips for field wiring. Remove front door to access the PCB's.

1) Line Voltage (120 VAC) Field Connections – See Figure 10.2 for line voltage connections. Provide a dedicated circuit for the boiler of 15A or greater. A service switch is recommended and is required by many local codes. Locate this switch in accordance with local codes or, in the absence of any, in a location where it can be safely accessed in an emergency involving the boiler. All 120VAC connections to the boiler itself are made on the terminal strip on the high voltage PCB located on the left side if the wiring compartment. 120VAC connections on the terminal strip are:

   - 120VAC Hot
   - 120VAC Neutral Ground
   - System Pump Hot
   - System Pump Neutral
   - DHW Pump Hot
   - DHW Pump Neutral
   - Boiler Pump Hot
   - Boiler Pump Neutral

The use of the pump outputs are as follows:

a) System Pump - Pumps water through the radiation. This pump is hydraulically separated from the boiler pump, either by closely spaced tees, or by a hydraulic separator. The system pump is always on when the system is responding to a call for CH. Depending on the DHW configuration, it may also be on during a call for DHW.

b) DHW Pump ("IWH Circulator") - Pumps water directly through the indirect water heater.

c) Boiler Pump - Pumps water through the boiler. Boiler pump is always on when the system is responding to a call for CH. Depending on the DHW configuration, boiler pump may be turned off when system is responding to a call for DHW.

Maximum combined current draw for all circulators is 6.3 FLA. See Section XII "Operation" for information on setting up the pump operation.

2) Low Voltage Field Connections – Low voltage field connections on the low voltage PCB are shown in Figure 10.3 and are listed from top to bottom:

- Heat T'Stat - 24VAC heating thermostat (R - 24V "Hot")
- Heat T'Stat - 24VAC heating thermostat (W - Energized or Call for Heat)
- Heat T'Stat - 24VAC heating thermostat (C - 24V Common)
- DHW T'Stat - 24VAC domestic hot water thermostat (1)
- DHW T'Stat - 24VAC domestic hot water thermostat (2)
- External Limit - Field supplied low voltage safety limit contacts (1)
- External Limit - Field supplied low voltage safety limit contacts (2)
- Alarm Contact (1)
- Alarm Contact (2)
- Outdoor Sensor - Tasseron TSA00AA Outdoor Temperature Sensor (1)
- Outdoor Sensor - Tasseron TSA00AA Outdoor Temperature Sensor (2)
- Header Sensor - Optional Honeywell 32003971-003 Sensor (1)
- Header Sensor - Optional Honeywell 32003971-003 Sensor (2)
- EnviraCOM Device (D)
- EnviraCOM Device (R)
- EnviraCOM Device (C)
- MODBUS - (A)
- MODBUS - (B)
- MODBUS - (-V)

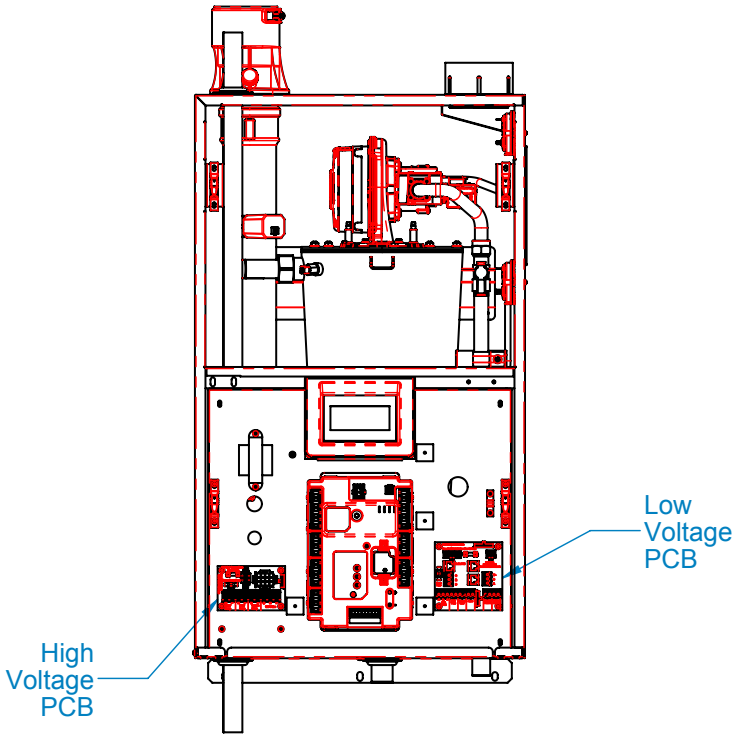

Figure 10.1: Location of High and Low Voltage Printed Circuit Boards (PCB)

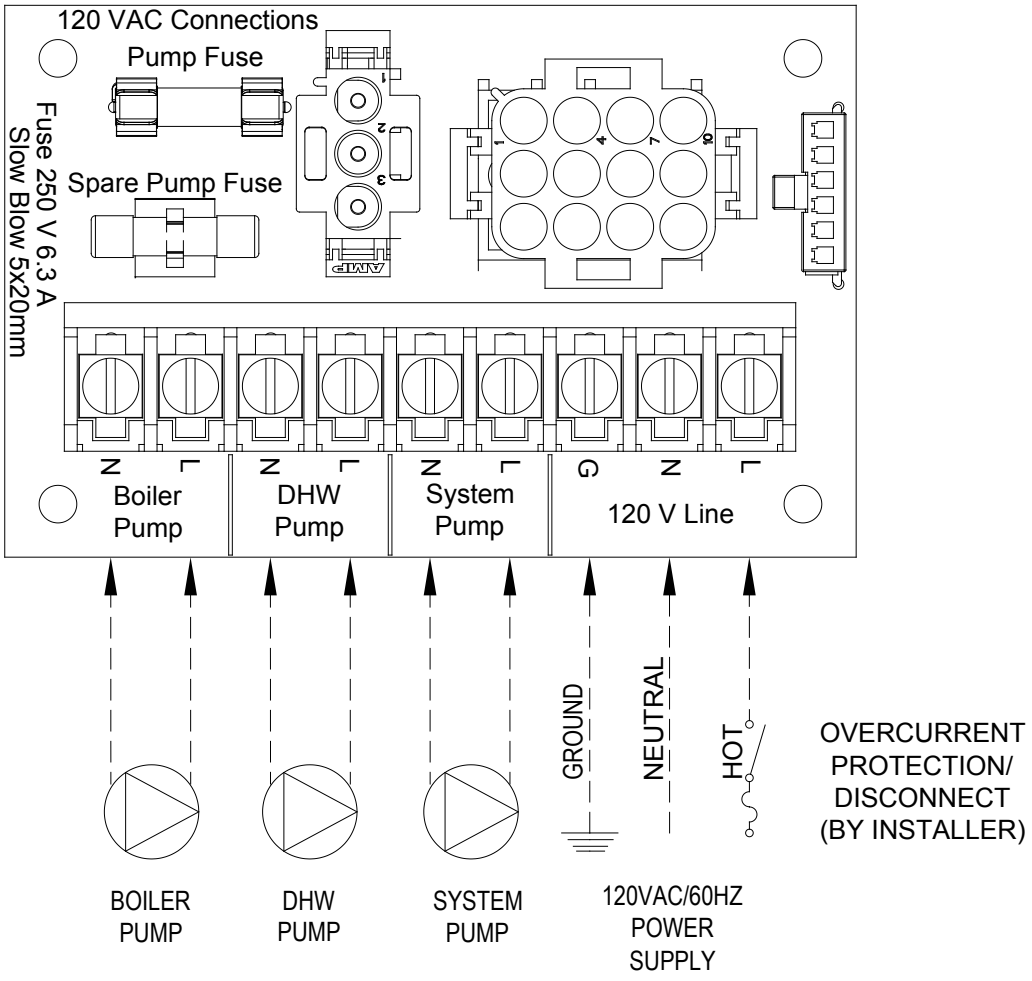

Figure 10.2: High Voltage PCB Terminal Connections

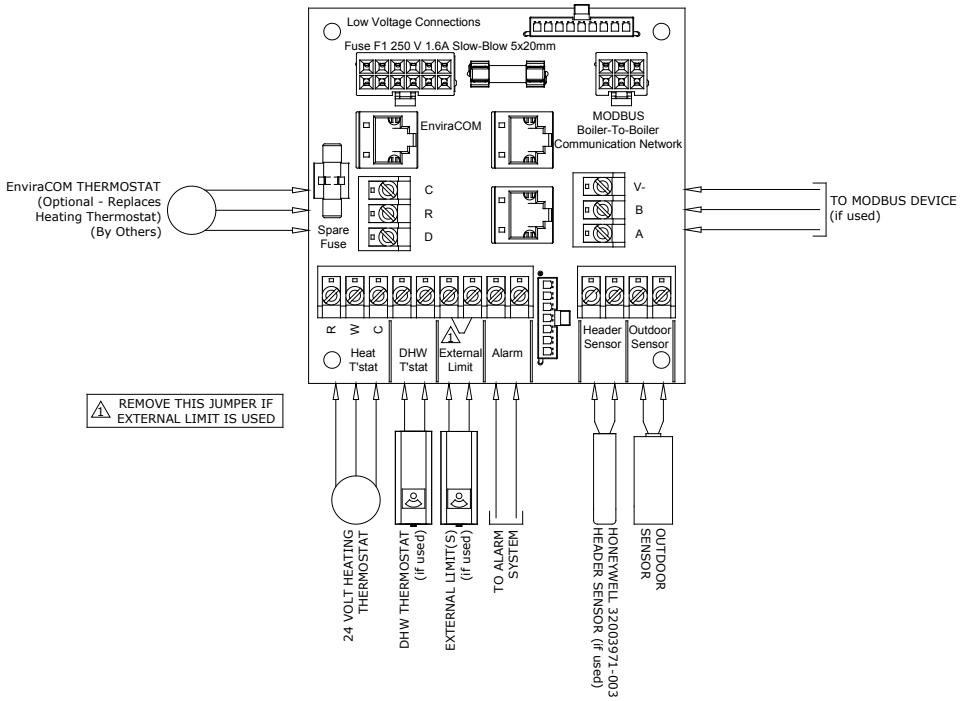

Figure 10.3: Low Voltage PCB Terminal Connections

With the exception of the alarm contacts, external power must not be applied to any of the low voltage terminals - doing so may damage the boiler control. Also note the following:

a) External Limit - The external limit terminals are intended for use with a field supplied safety device, such as a manual reset high limit. When an external limit is used, the jumper between these two terminals must be removed. Failure to remove this jumper will render the external safety devices ineffective.

b) Alarm Contacts - These contacts close when the boiler enters a "hard" lockout (lockout requiring manual reset). They may be used as an input to a building alarm system. Contact rating is 24VAC, 0.63FLA. Do not use for line voltage applications.

c) EnviraCOM - Used to connect EnviraCOM thermostat or other EnviraCOM device listed by the boiler manufacturer for use with this boiler. A Honeywell EnviraCOM connection is also located as labeled on the boiler control itself.

d) Outdoor Sensor - Use only the Tasseron TSA00AA (10 KOhms) outdoor sensor supplied with the boiler. When this sensor is connected and enabled, the boiler will adjust the target supply water temperature downwards as the outdoor air temperature increases. This sensor should be located on the outside of the structure in an area where it will sense the average air temperature around the house. Avoid placing this sensor in areas where it may be covered with ice or snow. In general, locations where the sensor will pick up direct radiation from the sun should also be avoided. Avoid placing the sensor near potential sources of electrical noise such as transformers, power lines, and fluorescent lighting. Wire the sensor to the boiler using 22 gauge or larger wire. As with the sensor itself, the sensor wiring should be routed away from sources of electrical noise. Where it is impossible to avoid such noise sources, wire the sensor using a 2 conductor, UL Type CM, AWM Style 2092 shielded cable. Connect one end of the shielding on this cable to ground. See Section XII "Operation" for information on enabling the outdoor reset sensor.

e) Header Sensor - When this sensor is installed and enabled, the boiler will attempt to maintain the target water temperature in the header rather than in the supply. Where the system flow rate varies widely, the use of a header sensor allows the temperature of the water being sent to the radiation to be more accurately controlled. Use sensor P/N 103104-01 (Honeywell 32003971-003) with 1/2" NPT immersion well, P/N 80160456. Installation of this sensor in a well, as opposed to on the surface of the header, is highly recommended. Alternatively use 1/2" NPT direct immersion sensor, P/N 101935-01. Locate this sensor immediately downstream of the second primary-secondary Tee (Figure 10.4). The sensor wiring should be routed away from sources of electrical noise. Where it is impossible to avoid such noise sources, wire the sensor using a 2 conductor, UL Type CM, AWM Style 2092, 300Volt 60°C shielded cable. Connect one end of the shielding on this cable to ground. See Section XII "Operation" for information on enabling the header sensor.

f) MODBUS - Boiler-To-Boiler communication network is used for multiple boiler ("Lead-Lag") installations. See the multiple boiler installation supplement for additional information.

⚠ CAUTION

When making low voltage connections, make sure that no external power source is present in the thermostat or limit circuits. If such a power source is present, it could destroy the boiler's control. One example of an external power source that could be inadvertently connected to the low voltage connections is a transformer in the old thermostat wiring.

Do not attempt to use EnviraCOM connections for any purpose not explicitly permitted by the boiler manufacturer. Attempting to do so may result in unreliable operation and/or damage to controls.

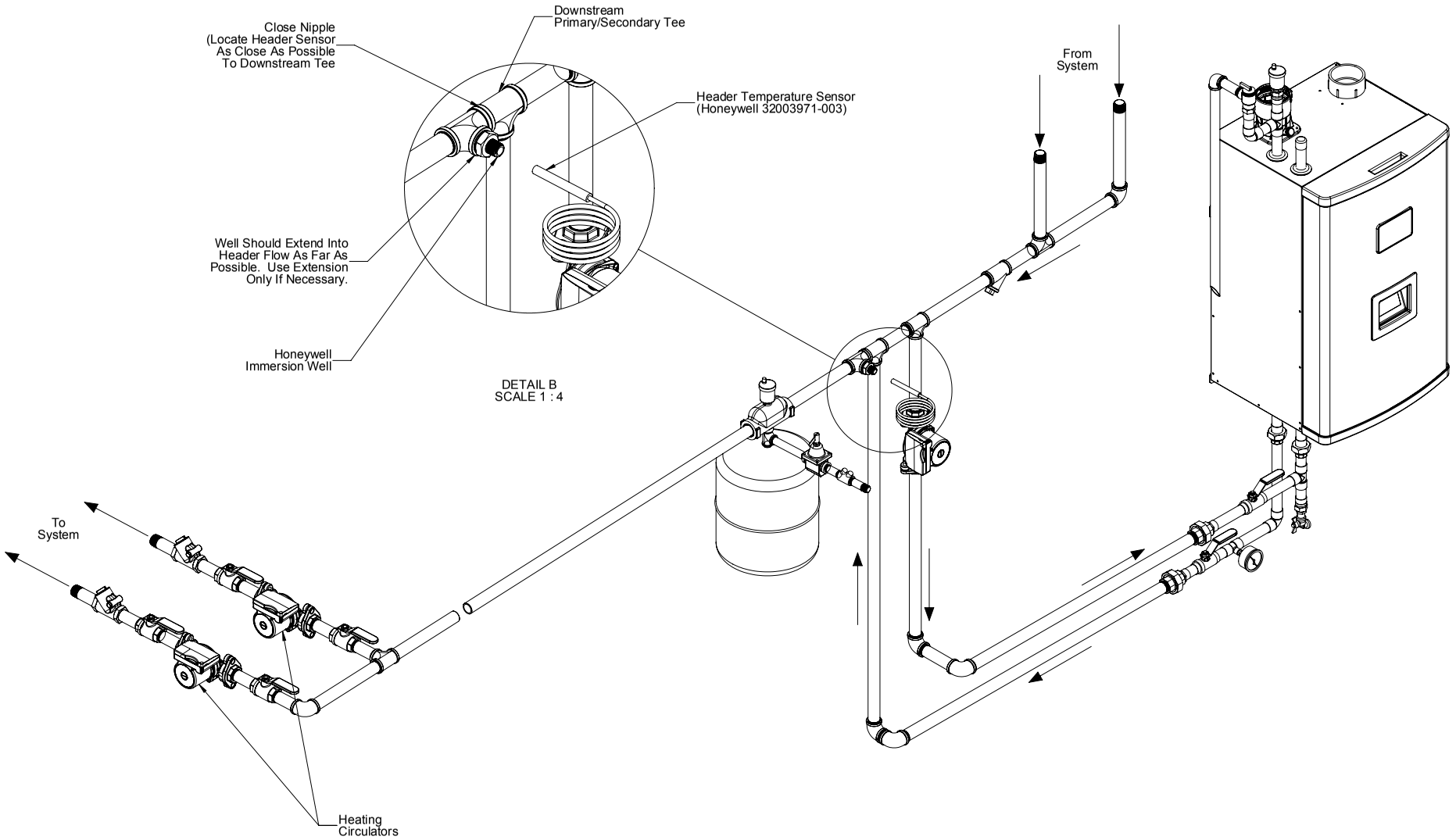

Figure 10.4: Proper Installation of Header Sensor

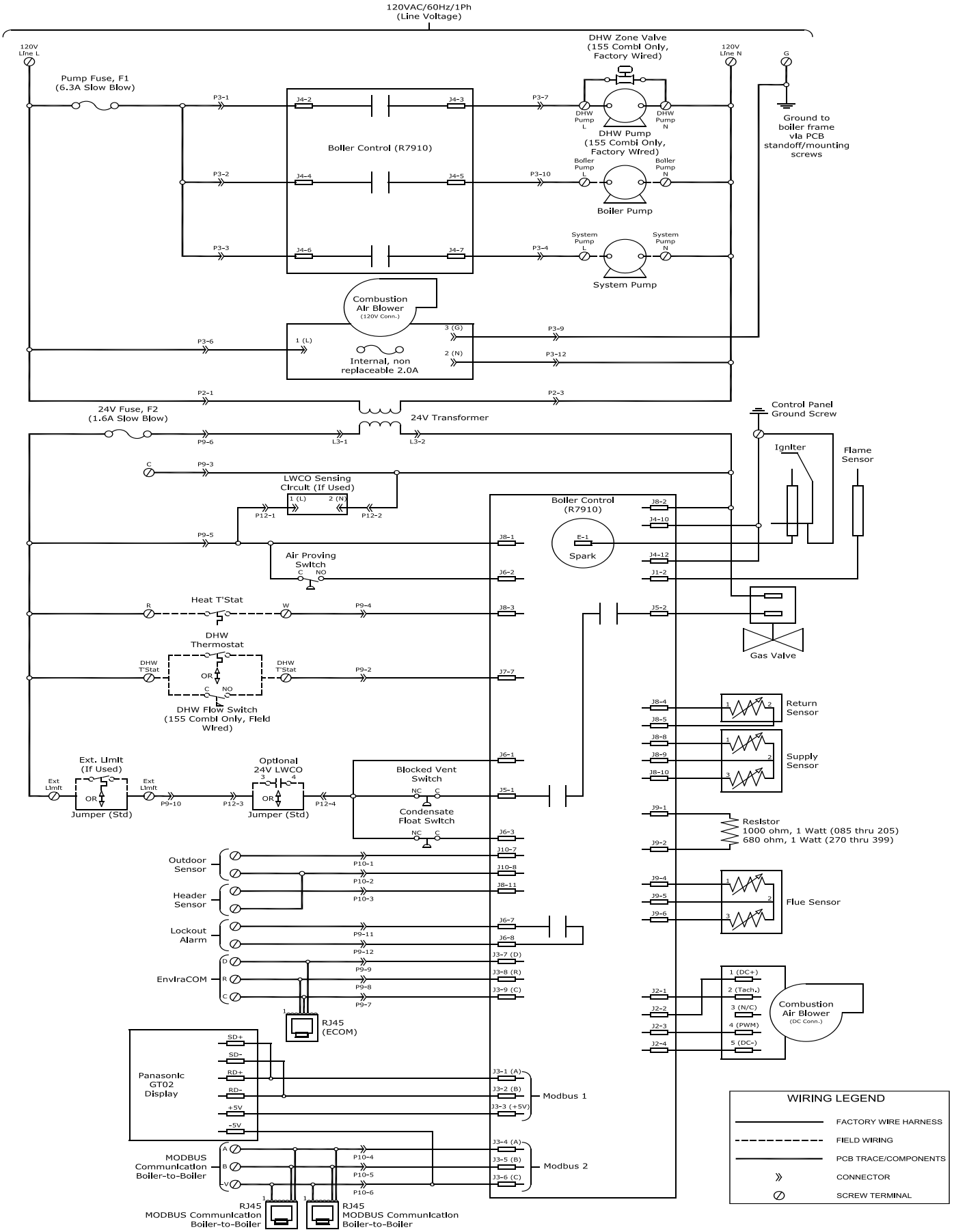

Figure 10.5: Internal Wiring Ladder Diagram

PAGE LEFT INTENTIONALLY BLANK.

X. Wiring (continued)

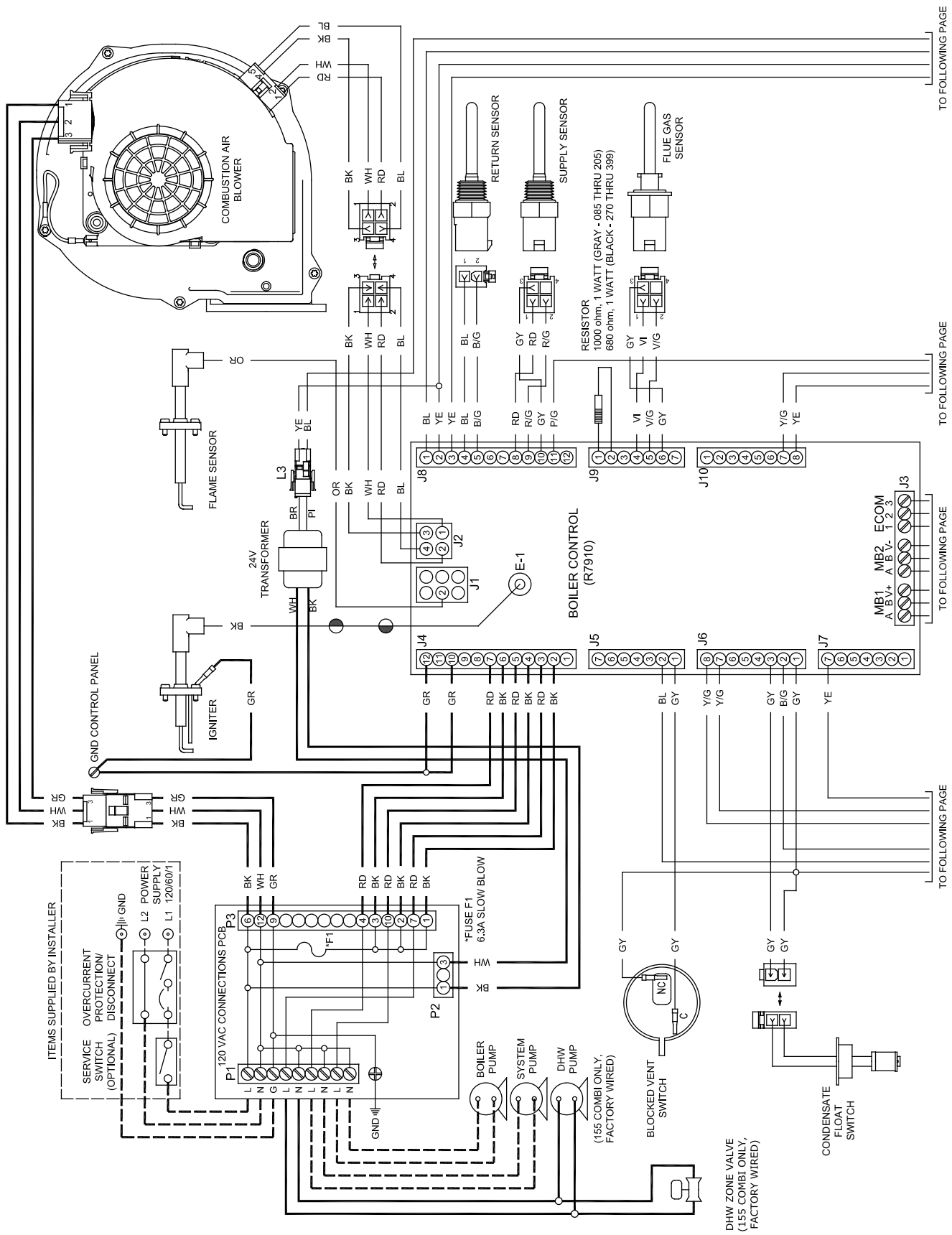

X. Wiring (continued)

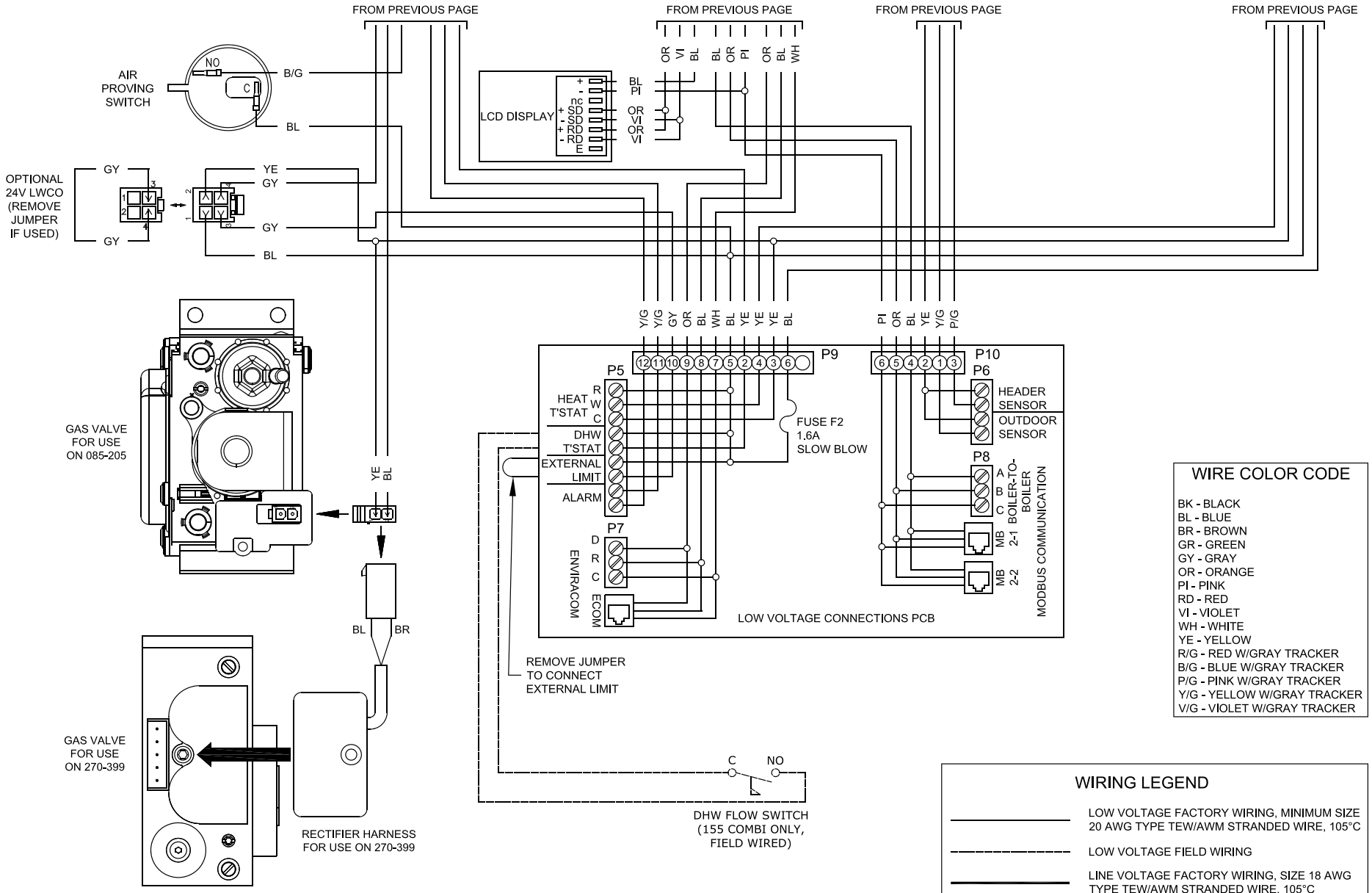

Figure 10.6: Internal Wiring Connections Diagram

NOTICE

System Pump hot must be wired to ZC as shown for optimal combi performance.

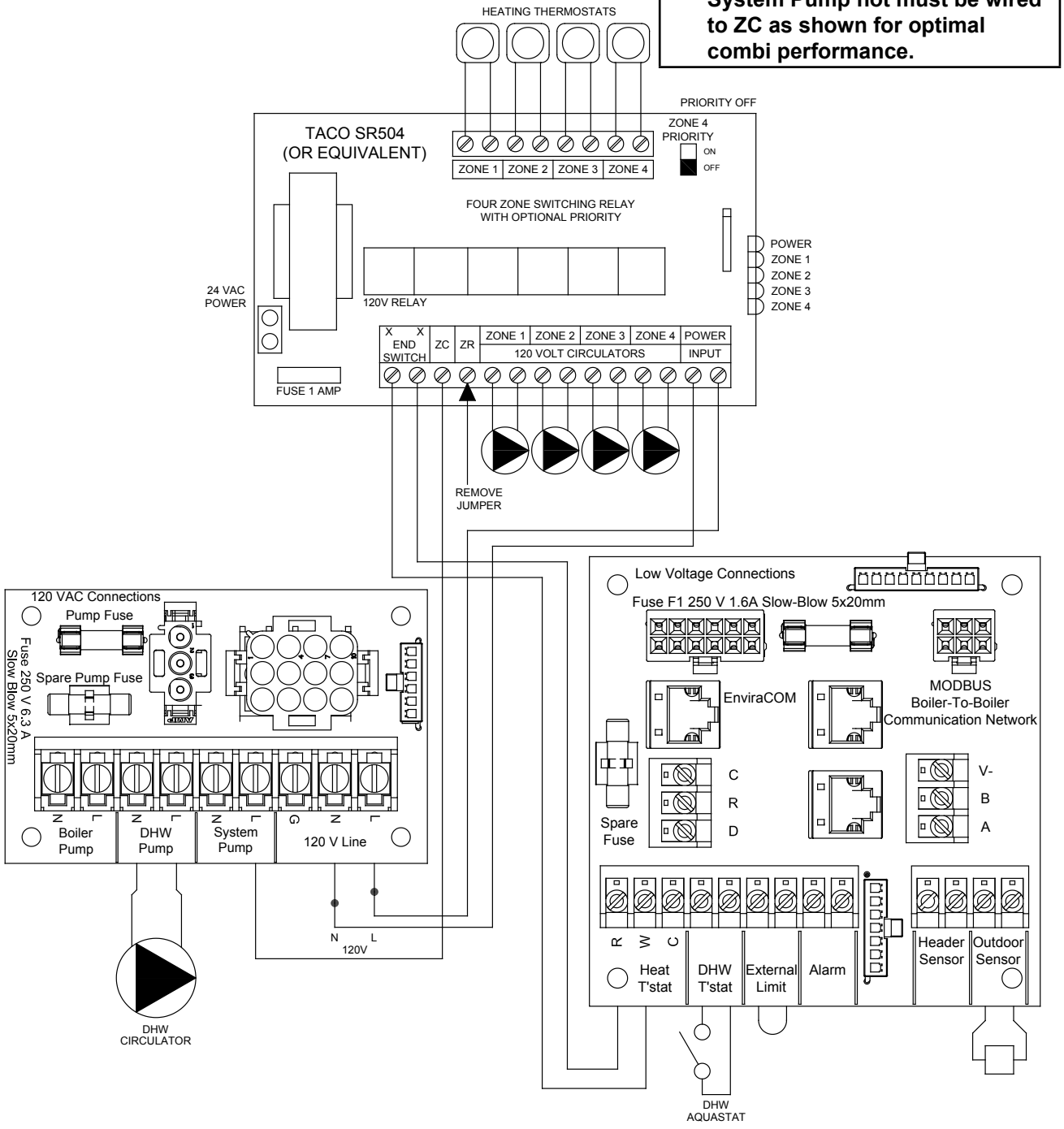

***USE SAME POWER SOURCE FOR ALL CONTROLS AND ENSURE POLARITY TO ALL CONTROL DEVICES IS CORRECT

Figure 10.7: TACO SR504 or Equivalent Zone Panel Wiring Connection Diagram

XI. Start-Up and Checkout

WARNING

Completely read, understand and follow all instructions in this manual before attempting start-up.

NOTICE

Safe lighting and other performance criteria were met with the gas train assembly provided on the boiler when the boiler underwent the test specified in ANSI Z21.13.

Use the following procedure for initial start-up of the boiler:

1) Verify that the venting, water piping, gas piping and electrical system are installed properly.
2) Confirm all electrical, water and gas supplies are turned off at the source and that vent is clear of obstructions.
3) Confirm that all manual shut-off gas valves between the boiler and gas source are closed.
4) If not already done, flush the system to remove sediment, flux, and traces of boiler additives.
5) Fill the boiler and hydronic system with water meeting the following requirements below (also see the NOTICE on the next page):
   - pH between 6.6 and 8.5
   - Hardness less than 7 grains/gallon
   - Chlorides less than 125 ppm
   - Iron level less than 0.5 ppm
   - Copper level less than 0.1 ppm
   - Pressurize the system to at least 14.5 psi at the boiler

WARNING

Burn Hazard. The maximum operating pressure of this boiler is 30 psig (210 kPa) or 80 psig (340 kPa), depending on the model and safety relief valve option selected. Never exceed the maximum allowable working pressure on the heat exchanger ASME plate.

6) Bleed air from the heat exchanger and piping system.
7) Check all gas piping for leaks and purge piping sections that are filled with air. Refer to the *National Fuel Gas Code* for additional information on testing and purging gas lines.

DANGER

Explosion Hazard. Do not use matches, candles, open flames or other ignition source to check for leaks.

Make sure that the area around the boiler is clear and free from combustible materials, gasoline and other flammable vapors and liquids.

8) Confirm vent system is complete and free of obstructions before attempting to fire boiler.
9) Inspect all wiring for loose, uninsulated or miswired connections.
10) If the boiler is to be converted to LP Gas (propane), convert as described in Conversion Kit instructions. If boiler is operating at elevations above 2,000 ft., see Appendix A of this manual for setup instructions.

DANGER

Asphyxiation Hazard. Failure to properly convert this boiler for use on LP Gas (propane) can cause unreliable operation at elevated carbon monoxide (CO) levels, resulting in personal injury or death.

NOTICE

To minimize the risk of premature heat exchanger failure, observe the following water chemistry requirements:

1) Minimize the introduction of make-up water, dissolved oxygen, and contaminants into the boiler by following the installation guidelines shown in the "Water Quality and Boiler Water Additives Note" on Page 72.

2) Make sure the system is filled with water meeting the following criteria:
   - pH between 6.6 and 8.5
   - Chloride level less than 125PPM. If fill water is drawn from a system containing a water softener, test a sample of the fill water to confirm that this criteria is met.
   - Hardness less than 7 grains/gallon.
   - Iron level less than 0.5PPM.
   - Copper level less than 0.1PPM.

3) Avoid the use of petroleum based boiler additives and ester-based oils/lubricants. These can attack seals in both the boiler and system.

4) If freeze protection is required, use the following or its equivalent:
   - Fernox Alphi -11 (inhibited Propylene Glycol). U.S. Boiler Part # 101146-01 is for a 5 gallon bucket.
   - Sentinel® X500 Inhibited Antifreeze (combined antifreeze and inhibitor)

Refer to the antifreeze manufacturer's instructions for required dosage. In general these products are a blend of glycol (for freeze protection) and inhibitors (to protect the glycol from attacking metallic system components). Do not add any more antifreeze than is necessary to protect the system from freeze damage. Many of these products require annual testing of the system water to ensure that the inhibitors are still active; consult the manufacturer's instructions for maintenance requirements. Allowance must be made for the additional expansion of the glycol solution.

5) Test antifreeze and inhibitor concentration annually.
   - Inhibitor concentration test kit for Fernox Protector F1, 25 tests per kit. Part Number: 101148-01
   - Inhibitor, Fernox Protector F1, 1 pint (500 mL). Part Number 101147-01

6) For system cleaning, use the following or its equivalent:
   - Fernox Cleaner F3
   - Sentinel® X400 System Restorer (For Older Closed Loop Hydronic Heating Systems)
   - Sentinel® X300 System Cleaner (For New Heating Systems)
   - Sentinel® X100 Inhibitor (For Protecting Closed Loop Hydronic Heating Systems Against Lime scale And Corrosion)

Refer To the instructions supplied with the cleaner for proper dosage and use.

Fernox products are available from Alent plc Consumer Products Division, 4100 6th Avenue, Altoona PA. (972) 547 6002 (fernox_usa@alent.com).

Sentinel® products are available from Douglas Products and Packaging, 1550 E. Old 210 Highway, Liberty, MO 64068, Tel:(877) 567-2560 (Toll Free) and/or selected HVAC distributors.

WARNING

Poison Hazard. Use only inhibited propylene glycol solutions specifically formulated for hydronic systems. Do not use ethylene glycol, which is toxic and can attack gaskets and seals used in hydronic systems. Use of ethylene glycol could result in property damage, personal injury or death.

11) Start the boiler using the operating instructions on page 105. With the boiler powered up, and with no call for heat, the display should look like Figure 11.1a. Once a call for heat is present, it will look like Figure 11.1b.

12) The boiler should attempt to fire approximately 30 seconds after a call for heat appears. With the front door removed from the boiler, this try for ignition will appear as an audible spark (lasting approximately 4 seconds) and an audible click from the gas valve. Upon initial start-up, the gas train will be filled with air. Even if the gas line has been completely purged of air, it may take several tries for ignition before a flame is established. If the boiler does not light after four tries for ignition, it will enter a "soft lockout" and will wait for one hour before attempting another ignition sequence. This soft lockout can be reset by interrupting power to the boiler for a few seconds. Once a flame has been established for the first time, subsequent calls for burner operation should result in a flame on the first try.

13) If there is a problem that appears before the first try for ignition, or if the boiler fails to light after four tries for ignition, the blinking red screen with "HELP" highlighted on the Home screen (Figure 11.1c). Touching this "HELP" button will take the user to the Diagnostics menu where the cause of the problem can usually be found by pressing the flashing button on each successive screen. For more information, see Section XII "Operation".

Note: If boiler does not start when first turned on, and problem cannot be remedied following "Help" prompts on the boiler display, it may be necessary to reset and adjust the throttle screw according to the following instructions:

1. **Fully close throttle** by turning throttle screw clockwise until it fully stops.

2. **Open throttle screw** counter-clockwise the number of full (360 degrees) and partial turns listed on Table 11.5.

14) Inspect the flame visible through the window. On high fire the flame should be stable and mostly blue (Figure 11.2). No yellow tipping should be present; however, intermittent flecks of yellow and orange in the flame are normal.

15) Check the inlet gas pressure. Verify that the inlet gas pressure is between the upper and lower limits shown on the rating plate with all gas appliances on and off.

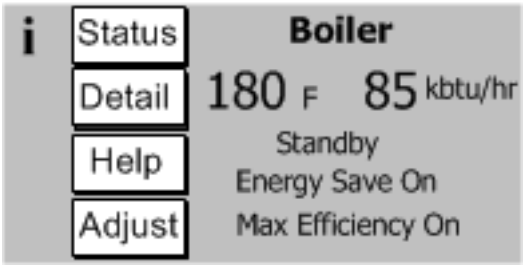

Figure 11.1a: Home Screen at Power-Up (No Call for Heat)

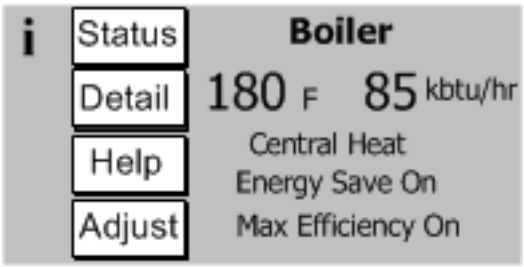

Figure 11.1b: Home Screen on Heat Demand

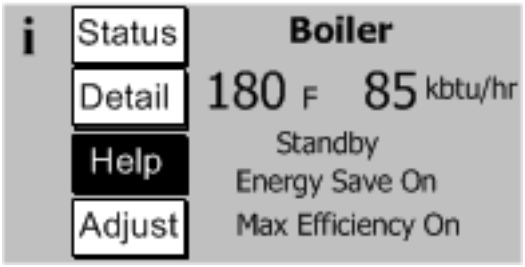

Figure 11.1c: Home Screen with Active Fault

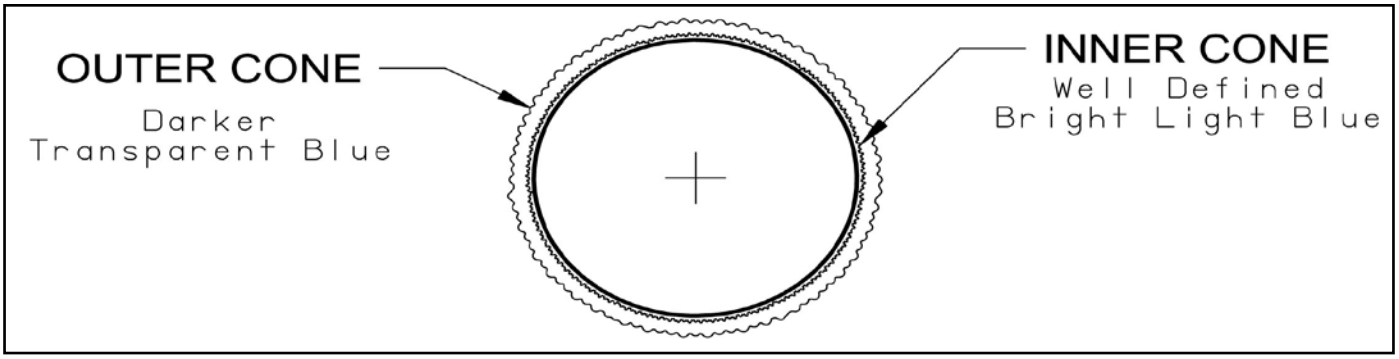

Figure 11.2: Burner Flame

WARNING

Asphyxiation Hazard. Each boiler is tested at the factory and adjustments to the air fuel mixture are normally not necessary when operating on natural gas at sea level. Consult the factory before attempting to make any such adjustments. Improper gas valve or mixture adjustments could result in property damage, personal injury or loss of life due to carbon monoxide (CO) poisoning.

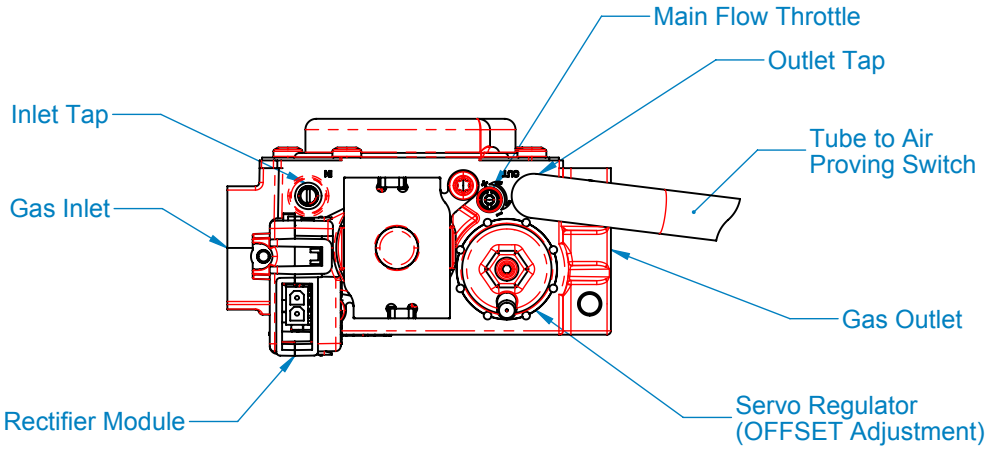

Figure 11.3a: 80-205 Gas Valve Detail

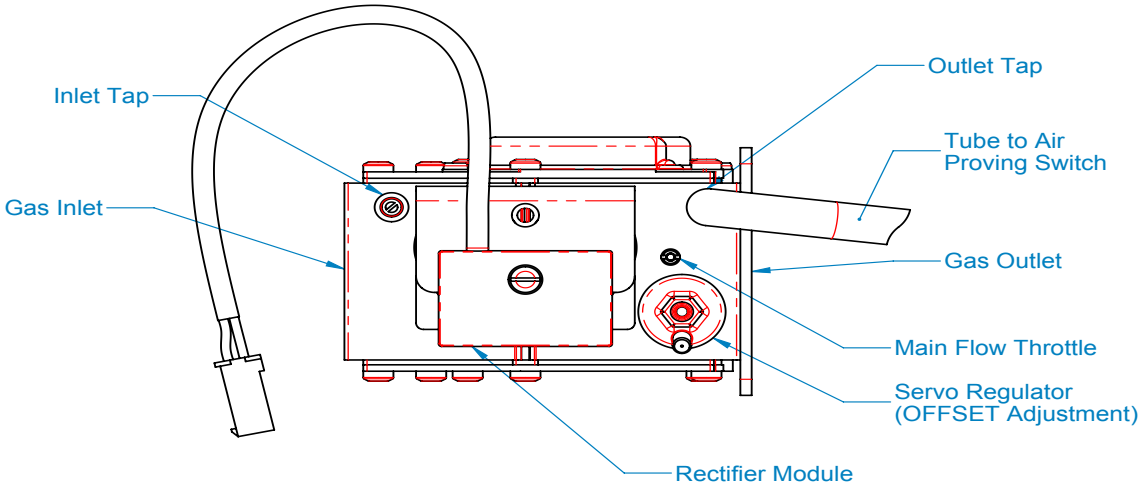

Figure 11.3b: 270 Gas Valve Detail

WARNING

- **Do not attempt to operate this boiler on LP gas without converting it using the proper conversion kit.**
- **Do not attempt to convert this boiler to LP gas without the use of a combustion analyzer.**
- **Failure to follow the conversion instructions will result in operation of the boiler at unsafe Carbon Monoxide (CO) levels and may result in personal injury or loss of life. Improper conversion may also result in unreliable operation, resulting in property damage.**
- **Before attempting to operate this boiler at altitudes above 2000 ft., follow instructions shown in Appendix A of this manual.**

WARNING

Asphyxiation Hazard. Use combustion analyzer for all gas valve adjustments. Low fire offset screw is very sensitive. Adjust offset no more than 1/8 turn before checking combustion with analyzer. Maximum total adjustment ± 1 turn. Failure to follow these instructions could result in death, serious injury or substantial property damage.

16) Perform a combustion test. Boilers are equipped with a screw cap in the vent adapter. Be sure to replace this cap when combustion testing is complete. Check CO_2 (or O_2) and CO at both high and low fire. The boiler may be temporarily locked into high or low fire as follows:

a) Fire the boiler through any call for heat.
b) From the Home Screen, press "ADJUST" to enter the adjust menu.
c) Press "ADJUST".
d) Press "LOGIN".
e) Press "000".
f) Enter the password "086".
g) Press return arrow ↵ to close the keypad.
h) Press "SAVE".
i) Press "ADJUST".
j) Press "MANUAL CONTROL".
k) Press "HIGH" or "LOW" as appropriate.

To return the boiler to automatic modulation, press AUTO FIRE. Note: If the Auto Fire button is not pressed, boiler will remain in manual fire for around 10 minutes. After 10 minutes boiler automatically returns to automatic modulation.

At both high and low fire, CO readings should be less than 200 PPM air free. Typical CO_2 and O_2 readings are shown in Table 11.4. Final readings should be taken with all doors and covers in place.

With burner at high fire, adjust throttle as needed to obtain CO_2 (or $O_{2)}$ setting shown in Table 11.4:

- To reduce the CO_2 (increase the O_2) turn throttle clockwise. ↻
- To increase the CO_2 (reduce the O_2) turn throttle counter clockwise. ↺

Make adjustments in increments of 1/8 and 1/4 turns and allow the boiler at least a minute to respond to each adjustment.

With the burner at low fire, adjust offset regulator as needed to obtain CO_2 (or O_2) setting shown in Table 11.4.

- To reduce the CO_2 (increase the O_2) turn offset regulator counter-clockwise. ↺
- To increase the CO_2 (reduce the O_2) turn offset regulator clockwise. ↻

Make adjustments in increments no more than 1/8 turns and allow the boiler at least a minute to respond to each adjustment before making another.

17) Perform a check of the ignition safety shut-off device. With the burner firing, carefully unplug the orange flame rod wire at the flame rod using a pair of insulated pliers. The burner should shut off immediately.

18) Test any external limits or other controls in accordance with the manufacturer's instructions.

19) Refer to the Operation Manual to set-up the control for the system in which the boiler is installed. Some common set-up tasks include:

- Setting the CH and DHW temperature set-points (as shipped, both setpoints are set to 180°F).
- Selecting the type of indirect water heater (if any) and location of DHW pumps.
- Defining the system pump operation.

20) Adjust the heating and indirect water heater thermostats to their final set points.

⚠ WARNING

All combustion performance numbers MUST be verified with a combustion analyzer. Failure to do so will result in substantial property damage, severe personal injury or death.

Table 11.4: Acceptable Combustion Readings for Natural Gas (0-2,000 ft.)

Boiler Size	High Fire CO_2		Low Fire CO_2*		Maximum CO Air-Free
	Range	Target	Range	Target	
85	9.0% to 9.7%	9.5%	8.7% to 9.5%*	9.5%	200ppm
110					
155					
205					
270					
* Ensure low fire CO_2 reading is less than or equal to high fire CO_2 reading					

Boiler Size	High Fire O_2		Low Fire O_2**		Maximum CO Air-Free
	Range	Target	Range	Target	
85	5.0% to 3.9%	4.2%	5.6% to 4.1%	4.2%	200ppm
110					
155					
205					
270					
** Ensure low fire O_2 reading is greater than or equal to high fire O_2 reading					

Table 11.5: Starting Number of Throttle Turns for Natural Gas

Model Size	No. Counter-clockwise Turns (From Fully Closed)
85	7.0
110	9.5
155	13.0
205	20.0
270	5.50

NOTICE

This boiler has a limited warranty, a copy of which is included with this boiler. It is the responsibility of the installing contractor to see that all controls are correctly installed and are operating properly when the installation is complete.

Operating Instructions

FOR YOUR SAFETY READ BEFORE OPERATING/POUR VOTRE SECÚRITE LISEZ AVÁNT DE METTRE EN MARCHE

WARNING: If you do not follow these instructions exactly, a fire or explosion may result causing property damage, personal injury or loss of life.

AVERTISSEMENT: Quiconque ne respecte pas à la lettre les instructions dans la présente notice risque de déclencher un incendie ou une explosion entraînant des dommages, des blessures ou la mort.

A. This appliance does not have a pilot. It is equipped with an ignition device which automatically lights the burner. Do not try to light the burner by hand.

B. BEFORE OPERATING smell all around the appliance area for gas. Be sure to smell next to the floor because some gas is heavier than air and will settle on the floor.

WHAT TO DO IF YOU SMELL GAS:

- Do not try to light any appliance.
- Do not touch any electric switch; do not use any phone in your building.
- Immediately call your gas supplier from a neighbor's phone. Follow the gas supplier's instructions.
- If you cannot reach your gas supplier, call the fire department.

C. Use only your hand to turn the gas control knob. Never use tools. If the knob will not turn by hand, don't try to repair it, call a qualified service technician. Force or attempted repair may result in a fire or explosion.

D. Do not use this appliance if any part has been under water. Immediately call a qualified service technician to inspect the appliance and to replace any part of the control system and any gas control which has been under water.

A. Cet appareil ne comporte pas de veilleuse. Il est muni d'un dispositif d'allumage qui allume automatiquement le brûleur. Ne tentez pas d'allumer le brûleur manuellement.

B. AVANT DE FAIRE FONCTIONNER, reniflez tout autour de l'appareil pour déceler une odeur de gaz. Reniflez près du plancher, car certains gaz sont plus lourds que l'air et peuvent s'accumuler au niveau du sol.

QUE FAIRE SI VOUS SENTEZ UNE ODEUR DE GAZ:

- **Ne pas tenter d'allumer d'appareil.**
- **Ne touchez à aucun interrupteur ; ne pas vous servir des téléphones se trouvant dans le bâtiment.**
- **Appelez immédiatement votre fournisseur de gaz depuis un voisin. Suivez les instructions du fournisseur.**
- **Si vous ne pouvez rejoindre le fournisseur, appelez le service des incendies.**

C. Ne poussez ou tournez la manette d'admission du gaz qu'à la main ; ne jamais utiliser d'outil. Si la manette reste coincée, ne pas tenter de la réparer ; appelez un technicien qualifié. Le fait de forcer la manette ou de la réparer peut déclencher une explosion ou un incendie.

D. N'utilisez pas cet appareil s'il a été plongé dans l'eau, même partiellement. Faites inspecter l'appareil par un technicien qualifié et remplacez toute partie du système de contrôle et toute commande qui ont été plongés dans l'eau.

OPERATING INSTRUCTIONS/ INSTRUCTIONS DE FONCTIONNEMENT

1. STOP! Read safety information above on this label.
2. Set the thermostat to lowest setting.
3. Turn off all electric power to the appliance.
4. This appliance is equipped with an ignition device which automatically lights the burner. Do not try to light the burner by hand.
5. Remove appliance front door.
6. Turn the manual gas valve handle clockwise ↷ to close the gas supply.
7. Wait five (5) minutes to clear out any gas. Then smell for gas, including near the floor. If you smell gas, STOP! Follow "B" in the safety information above on this label. If you don't smell gas, go to the next step.
8. Turn the manual gas valve handle counterclockwise ↶ to open the gas supply.
9. Replace appliance front door.
10. Turn on all electric power to the appliance.
11. Set the thermostat to the desired setting.
12. If the appliance will not operate, follow the instructions "To Turn Off Gas To Appliance" and call your service technician or gas supplier.

1. ARRÊTEZ ! Lisez les instructions de sécurité sur la portion supérieure cette étiquette.
2. Réglez le thermostat à la température la plus basse.
3. Coupez l'alimentation électrique de l'appareil.
4. Cet appareil est équipé de l' dispositif d'allumage qui automobile allume maticallyle brûleur. Ne tentez pas d'allumer le brûleur manuellement.
5. Enlevez la porte de devant de l'appareil.
6. Tourner la manuelle poignée ↷ en clapet à gaz dans le sens des aiguilles d'une montre pour fermer l'offre de gaz.
7. Attendre cinq (5) minutes pour laisser échapper tout le gaz. Reniflez tout autour de l'appareil, y compris près du plancher, pour déceler une odeur de gaz. Si vous seutez une odeur de gaz, ARRÊTEZ ! Passez à l'étape B des instructions de sécurité sur la portion supérieure de cette étiquette. S'il n'y a pas d'odeur de gaz, passez à l'étape suivante.
8. Tourner la manuelle compteur de poignée ↶ en clapet à gaz ouvrir dans le sens des aiguilles d'une montre le gaz approvisionnement.
9. Replacez la porte de devant l'appareil.
10. Mettez l'appareil sous tension.
11. Réglez le thermostat à la température désirée.
12. Si l'appareil ne se met pas en marche, suivez les instructions intitulées « Comment couper l'admission de gaz de l'appareil » et appelez un technicien qualifié ou le fournisseur de gaz.

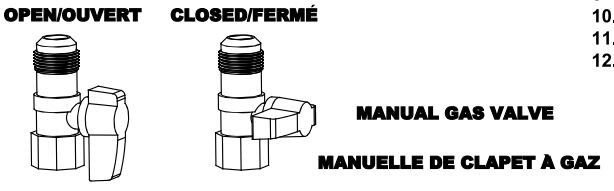

TO TURN OFF GAS TO APPLIANCE/ COMMENT COUPER L'ADMISSION DE GAZ DE L'APPAREIL

1. Set the thermostat to lowest setting.
2. Turn off all electirc power to the appliance if service is to be performed.
3. Remove appliance front door.
4. Turn the manual gas valve handle clockwise ↷ to close gas supply.

1. Réglez le thermostat à la température la plus basse.
2. Coupez l'alimentation électrique de l'appareil s'il faut procéder à l'entretien.
3. Enlevez la porte de devant de l'appareil.
4. Tourner la manuelle poignée ↷ en clapet à gaz dans le sens des aiguilles d'une montre pour fermer l'offre de gaz.

XII. Operation

IMPORTANT

This boiler is equipped with a feature that saves energy by reducing the boiler water temperature as the heating load decreases. This feature is equipped with an override which is provided primarily to permit the use of an external energy management system that serves the same function. THIS OVERRIDE MUST NOT BE USED UNLESS AT LEAST ONE OF THE FOLLOWING CONDITIONS IS TRUE:

- An external energy management system is installed that reduces the boiler water temperature as the heating load decreases.
- This boiler is not used for any space heating.
- This boiler is part of a modular or multiple boiler system having a total input of 300,000 BTU/hr or greater.
- This boiler is equipped as a combi unit.

A. Overview

1. B1020 Controller

The B1020 Controller (Control) contains features and capabilities which help improve heating system operation, and efficiency. By including unique capabilities, the Control can do more, with less field wiring, and fewer aftermarket controls and components – improving the operation of both new and replacement boiler installations.

2. Advanced Touch Screen Display

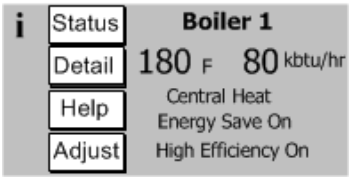

Home Screen

Boiler status and setup selections are available from an easy to use LCD Touch Screen Display. In the event of a fault condition the user is guided by "blinking" touch buttons to Help screens that describe the problem. Operation evaluation and problem-solving is enhanced by historical capability including graphic trends, lockout history records as well as boiler and circulator cycle counts and run time hours.

3. Advanced Modulating Control

The Control modulates the boiler input by varying the fan speed. As the fan speed increases, so does the amount of fuel gas drawn into the blower. As a result, a fairly constant air-fuel ratio is maintained across all inputs. The Control determines the input needed by looking at both current and recent differences between the measured temperature and the setpoint temperature. As the measured temperature approaches the setpoint temperature, the fan will slow down and the input will drop. The Control also utilizes boiler return water and flue gas temperatures to adjust fan speed.

4. Built-in Safety Control

The Control includes safety controls designed to ensure safe and reliable operation. In addition to flame safety controls the Control includes supply water temperature, differential water temperature, and stack temperature safety limits and stepped modulation responses. Boiler modulation is adjusted when required to help avoid loss of boiler operation due to exceeding limits. Additionally, the Control accepts the field installation of optional auxiliary safety limits.

5. Outdoor Air Reset

When selected the modulation rate setpoint is automatically adjusted based on outside air temperature, time of day and length of demand (boost) settings. Outdoor air "reset" setpoint saves fuel by adjusting the water temperature of a heating boiler lower as the outside air temperature increases.

6. Warm Weather Shutdown (WWSD)

Some boilers are used primarily for heating buildings, and the boilers can be automatically shutdown when the outdoor air temperature is warm. When outside air temperature is above the WWSD setpoint, this function will shut down the boiler, boiler and system pump.

7. Energy Management System (EMS) Interface

A factory configured RS485 Modbus interface is available for Energy Management System (EMS) monitoring when not used for Multiple Boiler Sequencer Peer-To-Peer Network. Consult factory for points list or if this interface must be used in addition to the boiler Peer-to-Peer Network.

8. Circulator Control

The Control may be used to sequence the domestic hot water, boiler and system circulators. Service rated relay outputs are wired to a line voltage terminal block for easy field connection. Simple parameter selections allow all three pumps to respond properly to various hydronic piping arrangements including either a boiler or primary piped indirect water heater. Circulators may be configured to provide the functionality of a two zone zone panel. The system and DHW pump outputs may be configured as one heating and one domestic or two heating zones. Circulators are automatically run for a 20 second exercise period after not being used for longer than 7 days. Circulator exercise helps prevent pump rotor seizing.

9. Multiple Boiler Sequencer Peer-To-Peer Network

The Control includes state-of-the-art modulating lead-lag sequencer for up to eight (8) boilers capable of auto rotation, outdoor reset and peer-to-peer communication. The peer-peer network is truly "plug and play". Communication is activated by simply connecting a RJ45 ethernet cable between boilers. The Control provides precise boiler coordination by sequencing boilers based on both header water temperature and boiler modulation rate. For example, the lead boiler can be configured to start a lag boiler after operating at 50% modulation rate for longer than an adjustable time. The boilers are modulated in "unison" (parallel) modulation rate to ensure even heat distribution.

Table 12.1: Order of Priority

Priority	Status Screen Display	Boiler Responding to:
1st	Sequencer Control	The boiler is connected to the peer-to-peer network. The boiler accepts demand from the Sequencer Master.
2nd	Domestic Hot Water	DHW call for heat is on and selected as the priority demand. DHW is always higher priority than Central Heat. It also has higher priority than the Sequencer Control when DHW priority is "enabled" and "Boiler Piped" IWH is selected.
3rd	Central Heat	Central Heat call for heat is on and there is no DHW demand or DHW priority time has expired.
4th	Auxiliary Heat	Auxiliary Heat call for heat is on and there is no Central Heat or DHW demand. (NOTE: May be user selected to be higher priority than Central Heat.)
5th	Frost Protection	Frost Protection is active and there is no other call for heat. Frost protection will be a higher priority than Sequencer Control if the Sequence Master has no active call for heat.
6th	Warm Weather Shutdown (WWSD)	WWSD is active and the boiler will not respond to central heat demands. DHW demand is not blocked by WWSD.
7th	Standby	There is no demand detected.

B. Supply Water Temperature Regulation

1. Priority Demand

The Control accepts a call for heat (demand) from multiple places and responds according to it's "Priority". When more than 1 demand is present the higher priority demand is used to determine active boiler settings. For example, when Domestic Hot Water (DHW) has priority the setpoint, "Diff Above", "Diff Below" and pump settings are taken from DHW selections. Active "Priority" is displayed on the "Boiler Status" screen.

2. Setpoint Purpose

The Control starts and stops the boiler and modulates the boiler input from minimum (MBH) to maximum (MBH) in order to heat water up to the active setpoint. The setpoint is determined by the priority (Central Heat or Domestic Hot Water) and as described in the following paragraphs.

3. Central Heat Setpoint

Upon a Central Heat call for heat the setpoint is either the user entered Central Heat Setpoint, or is automatically adjusted by Outdoor Air Reset or, an Energy Management System (EMS) supplied setpoint.

4. Auxiliary Heat Setpoint

Auxiliary Heat is a second heating demand that may be used to serve either lower temperature radiation or warmer heat demands such as fan coils. Upon an Auxiliary Heat call for heat the setpoint is either the user entered Auxiliary Heat Setpoint or is automatically adjusted as Outdoor Air Reset.

5. Outdoor Air Reset

If an outdoor temperature sensor is connected to the boiler and Outdoor Reset is enabled, the Central Heat setpoint will automatically adjust downwards as the outdoor temperature increases. When the water temperature is properly matched to heating needs there is minimal chance of room air temperature overshoot. Excessive heat is not sent to the room heating elements by "overheated" (supply water temperature maintained too high a setting) water. Reset control saves energy by reducing room over heating, reducing boiler temperature & increasing combustion efficiency and, reducing standby losses as a boiler and system piping cool down to ambient following room over heating.

6. Boost Time

When the Central Heat Setpoint is decreased by Outdoor Air Reset settings the Boost function can be enabled to increase the setpoint in the event that central heat demand is not satisfied for longer than the Boost Time minutes. The Boost feature increases the operating temperature setpoint by 10°F (5.6°C) every 20 minutes (field adjustable) the central heat demand is not satisfied. This process will continue until heat demand is satisfied (indoor air is at desired temperature), or the central heat setpoint is reached. Once the heat demand is satisfied, the operating setpoint reverts to the value determined by the Outdoor Air Reset settings. If Boost Time is zero, then the boost function is not used.

7. Domestic Hot Water (DHW) Setpoint

Upon a DHW call for heat the setpoint is the user entered DHW setpoint . The optimal value of this setpoint is established based on the requirements of the indirect water heater.

8. Domestic Hot Water Priority (DHWP)

When domestic hot water priority is selected and there is a DHW call for heat, the system pump will be turned off (when "System Pump Run Pump for" parameter is set for "Central Heat Optional Priority") and the DHW pump will be turned on. Additionally, if outdoor reset is active, the active setpoint is adjusted to the DHW Setpoint. Priority protection is provided to ensure central heat supply in the case of excessively long DHW call for heat.

C. Boiler Protection Features

1. Supply Water Temperature High Limit

The control is equipped with internal operating control and high limit features. The control monitors a dual element temperature sensor that is mounted in the supply water manifold and provides UL353 and UL1998 internal safety algorithms. If supply water temperature increases above the active setpoint plus diff above, default 190°F (87.7°C) the boiler is cycled off. If the temperature exceeds 210°F (98.9°C), a manual reset hard lockout results. If the boiler is responding to the internal Multiple Boiler Control Sequencer, Header Sensor or an External EMS demand and the supply water temperature increases above 190°F (87.7°C) the control begins to reduce the blower maximum speed setting and if the temperature increases to 200°F (93°C) a forced recycle results. Additionally, if the supply temperature rises faster than the degrees Fahrenheit per second limit a soft lockout is activated.

2. High Differential Temperature Limit

The Control monitors the temperature difference between the return and supply sensors. If this difference exceeds 52°F (29°C) the control begins to reduce the maximum blower speed. If temperature difference exceeds 62°F (34°C) a forced boiler recycle results. The unit will restart automatically once the temperature difference has decreased and the minimum off time has expired. If the temperature difference remains above 72°F (40°C) for longer than 3 minutes a manual reset hard lockout results.

3. Return Temperature Higher Than Supply Temperature (Inversion Limit)

The Control monitors the supply and return temperature sensors. If the return water temperature exceeds the supply water temperature for longer than a limit time delay the Control shuts down the boiler and delays restart. If the inverted temperature is detected more than five times the boiler manual reset Hard Lockout is set. This condition is the result of incorrectly attaching the supply and return piping.

4. External Limit

An external limit control can be installed on the low voltage terminal strip. Be sure to remove the jumper when adding an external limit control to the system. If the external limit opens, the boiler will shut down and an open limit indication and error code are provided. If the limit installed is a manual reset type, it will need to be reset before the boiler will operate.

5. Boiler Mounted Limit Devices

The control monitors individual limit devices: External Limit, Optional Low Water Cut-Off (LWCO), Blocked Vent Switch, and Condensate Float Switch. If any of these limits open the boiler will shut down and an open limit indication is provided. Additionally, the control monitors an air proving switch. During the boiler start sequence the control requires the air proving switch to be in the "open" position before the blower starts and in the "closed" position after the blower starts. If the air proving switch is not in the required position the start sequence is halted or the boiler is shut down and the open limit indication is provided. The air proving switch is only required to be closed during pre-purge. It is normal for the air proving switch to be open during run mode.

6. Stack High Limit

The Control monitors the flue gas temperature sensor located in the vent connector. If the flue temperature exceeds 194°F (90°C), the control begins to reduce the maximum blower speed. If the flue temperature exceeds 204°F (96°C), a forced boiler recycle results. If the flue temperature exceeds 214°F (101°C), the control activates a manual reset Hard Lockout.

7. Flame Current Modulation Boost

To help prevent nuisance shutdowns when the boiler is firing at minimum firing rates, the control will increase the firing rate when the flame current is too low.

8. Ignition Failure

The Control monitors ignition using a burner mounted flame sensor. In the event of an ignition failure, the control retries 5 times and then goes into soft lockout for one hour.

9. Central Heating System Frost Protection

When enabled, Frost Protection starts the boiler and system pump and fires the boiler when low outside air and low supply water temperatures are sensed. The Control provides the following control action when frost protection is enabled:

Table 12.2: Frost Protection

Device Started	Start Temperatures	Stop Temperatures
Boiler Pump	Outside Air < 0°F (-18°C) Supply Water < 45°F (7.2°C)	Outside Air > 4°F (-16°C) Supply Water > 50°F (10°C)
Boiler	Supply Water < 38°F (3.3°C)	Supply Water > 50°F (10°C)

FROST PROTECTION NOTE

The Control helps provide freeze protection for the boiler water. Boiler flue gas condensate drain is not protected from freezing. Since the Control only controls the system and boiler circulators individual zones are not protected. It is recommended that the boiler be installed in a location that is not exposed to freezing temperatures.

D. Multiple Boiler Control Sequencer

1. "Plug & Play" Multiple Boiler Control Sequencer

When multiple boilers are installed, the Control's Sequencer may be used to coordinate and optimize the operation of up to eight (8) boilers. Boilers are connected into a "network" by simply "plugging in" standard ethernet cables into each boiler's "Boiler-To-Boiler Communication" RJ45 connection.

2. Sequencer Master

A single Control is parameter selected to be the Sequencer Master. The call for heat, outdoor and header sensors, and common pumps are wired to the Sequencer Master "enabled" Control.

3. Lead/Slave Sequencing & Equalized Run Time

One boiler is a "Lead" boiler and the remaining networked boilers are "Slaves". When demand is increasing, the Lead boiler is the first to start and the Slave boilers are started in sequential order (1,2,3,…) until the demand is satisfied. When demand is decreasing, the boilers are stopped in reverse order with the Lead boiler stopped last (…,3,2,1). To equalize the run time the sequencer automatically rotates the Lead boiler after 24 hours of run time.

4. Improved Availability

The following features help improve the heat availability:

a. Backup Header Sensor: In the event of a header sensor failure the lead boiler's supply sensor is used by the Sequence Master to control firing rate. This feature allows continued coordinated sequencer control even after a header sensor failure.

b. "Stand Alone" Operation Upon Sequence Master Failure: If the Sequence Master Control is powered down or disabled or if communication is lost between boilers, individual boilers may be setup to automatically resume control as a "stand alone" boiler.

c. Slave Boiler Rate Adjustment: Each slave boiler continues to monitor supply, return and flue gas temperatures and modifies the Sequence Master's firing rate demand to help avoid individual boiler faults, minimize boiler cycling and provide heat to the building efficiently.

d. Slave Boiler Status Monitoring: The Sequence Master monitors slave boiler lockout status and automatically skip over disabled boilers when starting a new slave boiler.

5. Customized Sequences

Normally, boilers are started and stopped in numerical order. However, custom sequences may be established to optimize the heat delivery. For example, in order to minimize boiler cycling, a large boiler may be selected to run first during winter months and then selected to run last for the remainder of the year.

6. Multiple Demands

The Sequence Master responds to Central Heat, Auxiliary Heat, DHW and frost protection demands similar to the stand alone boiler. For example, when selected and DHW priority is active, the sequence master uses DHW setpoint, "Diff Above", "Diff Below" and pump settings.

7. Shared or Isolated DHW Demand

When the Indirect Water Heater (IWH) parameter is set to "Primary Piped" the Sequence Master sequences all required boilers to satisfy the DHW setpoint. When "Boiler Piped" is selected only the individual slave boiler, with the wired DHW demand and pump, fires to satisfy the DHW setpoint.

8. DHW Two boiler Start

When the Indirect Water Heater (IWH) parameter is set to "Primary Piped" and the DHW Two Boiler Start parameter is set to "Enabled" two boilers are started without delay in response to a DHW call for heat. This feature allows rapid recovery of large IWH's and multiple IWH's.

9. Optimized Boiler Modulation

Boiler firing rate is managed to increase smoothly as boilers are started. For example, when a second boiler is started the initial firing rate is 100%/2 or 50%, when the third boiler is started the firing rate starts at 200%/3 or 66%. After the initial start, the Sequence Master develops a unison firing rate demand based on it's setpoint and sensed header temperature.

10. Innovative Condensing Boiler Control

During low loads, the Sequence Master limits firing rates to a "Base Load Common Rate" to ensure modulating condensing boiler peak operating efficiency. Lower firing rates boost efficiency by helping increase the amount of flue gas water vapor condensation. The Control maintains a "Base Load Common Rate" until the last lag boiler is started. At this point, the "Base Load Common Rate" is released to allow boilers to modulated as required to meet heat load.

11. Advanced Boiler Sequencing

After there is a Call For Heat input, both header water temperature and boiler firing rate percent are used to start and stop the networked boilers. The control starts and stops boilers when the water temperature is outside the user selected "Diff Above" and "Diff Below" settings. Also, in order to minimize temperature deviations, the control adjusts the number of boilers running based on the firing rate. This combination allows the boilers to anticipate slow load changes before they disrupt water temperature yet still respond quickly to sudden load changes. These special sequencer features help reduce energy wasting system temperature swings and the resulting unnecessary boiler cycling.

12. Stop All Boilers

All boilers are stopped without delay if the Call for Heat input is removed or if the header temperature is higher than 195°F (90.6°C) (field adjustable).

E. Boiler Sequence of Operation

1. Normal Operation

Table 12.3: Boiler Sequence of Operation

Status Screen Display		Description
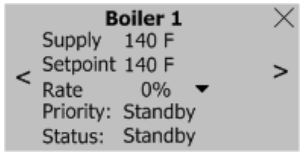	Priority: Standby Status: Standby	(burner **Off**, circulator(s) **Off**) Boiler is not firing and there is no call for heat, priority equals standby. The boiler is ready to respond to a call for heat.
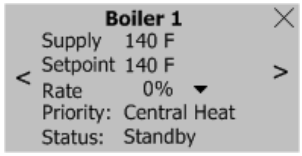	Priority: Central Heat Status: Standby	(burner **Off**, circulator(s) **On**) Boiler is not firing. There is a Central Heat call for heat and the Supply temperature is greater than setpoint minus the “Diff Below”.
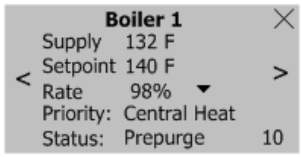	Priority: Central Heat Status: Prepurge	When supply temperature drops burner demand continues with following Status shown: Safe Startup: Flame circuit is tested. Drive purge: The blower is driven to the fan purge speed. Prepurge: After the blower reaches the fan purge speed setting the combustion chamber purge is conducted.
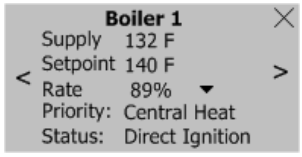	Priority: Central Heat Status: Direct ignition	After purge time is complete the following Status is shown: Drive light-off: The blower is driven to light-off rate. Pre-Ignition Test: After the blower reaches light-off rate a safety relay test is conducted. Pre-ignition: Spark is energized and it is confirmed that no flame is present Direct Ignition: Spark and Main fuel valve are energized.
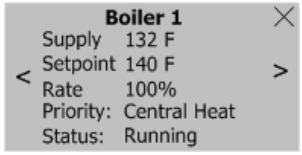	Priority: Central Heat Status: Running	(burner **On**, circulator(s) **On**) After flame is proven the sequence continues with run stabilization and low fire hold time. Once the field adjustable low fire hold time is completed normal boiler operation begins, modulation rate depending on temperature and setpoint selections.
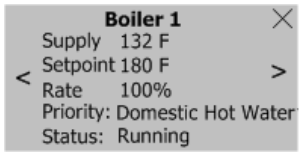	Priority: Domestic Hot Water Status: Running	If the Central Heat call for heat is active and a Domestic Hot Water (DHW) call for heat received the DHW demand becomes the “priority” and the modulation rate, setpoint, “Diff Above” and “Diff Below” are based on DHW settings.
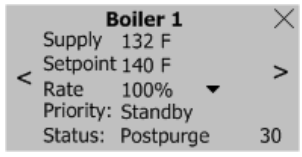	Priority: Standby Status: Post-purge	(burner **Off**, circulator(s) **Off**) If there is no call for heat the main fuel valve is closed and the blower is driven to the fan post-purge speed. After the blower reaches the fan post-purge speed setting the combustion chamber purge is conducted.
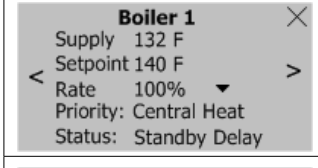	Priority: Standby Status: Standby Delay	Standby delay status is entered when a delay is needed before allowing the burner control to be available. Select “Help” button from the “Home Screen” to determine the cause of the Standby Delay.
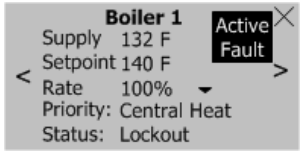	Priority: Standby Status: Lockout	A lockout status is entered to prevent the boiler from running due to a detected problem. Select “Help” button from the “Home Screen” to determine the cause of the Lockout. The last 5 Lockouts are recorded in the Lockout History.

2. Using The Display

The Control includes a touch screen LCD display. The user monitors and adjusts boiler operation by selecting screen navigation "buttons" and symbols. The "Home Screen" and menu selections are shown below. When no selection is made, while viewing any screen, the display reverts to the "Home Screen" after 4 minutes. The "Home Screen" provides boiler temperature, firing rate in BTU/hr, boiler status, efficiency information and page links.

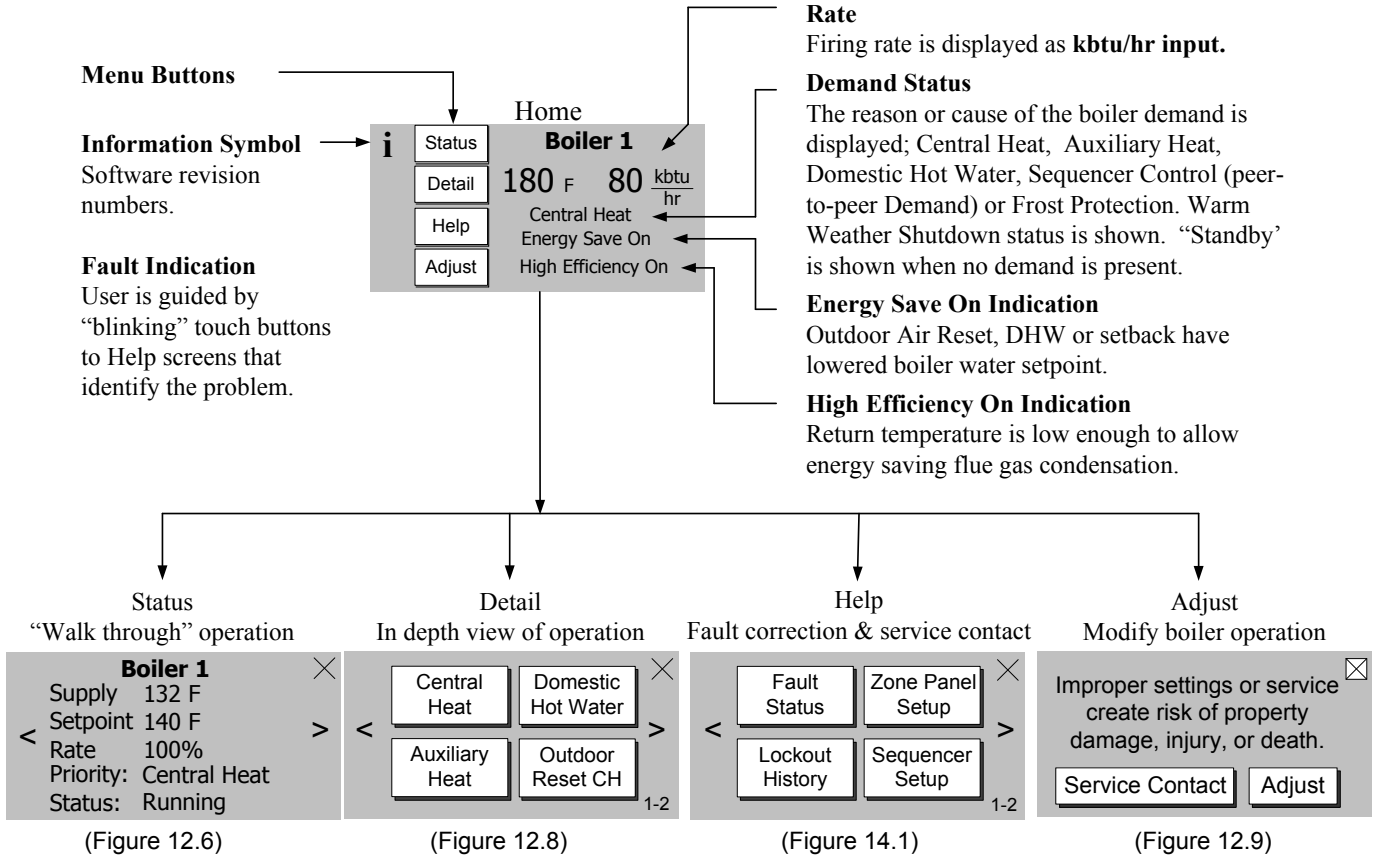

Figure 12.4: Home Screen Details

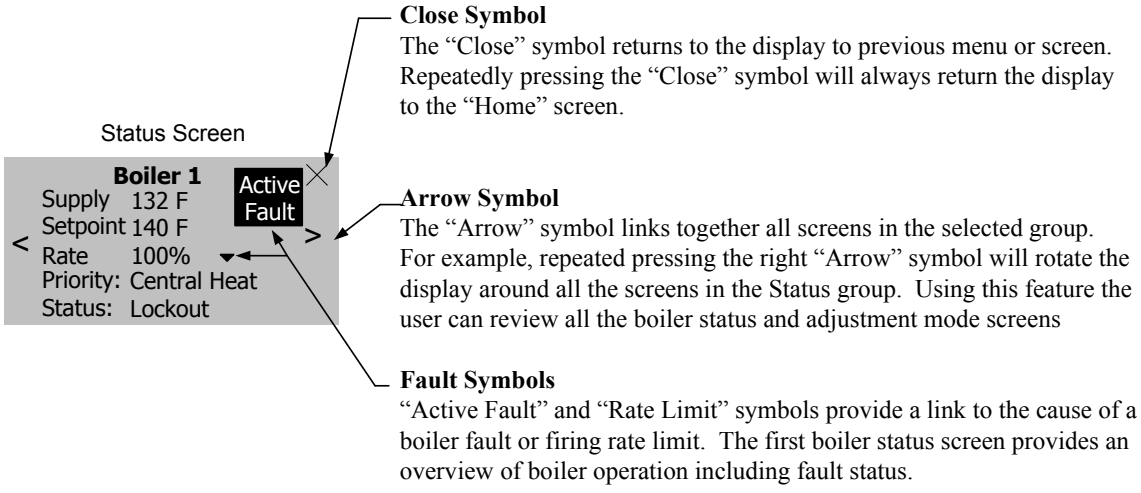

Figure 12.5: Screen Navigation

3. Status Screens

Boiler Status screens are the primary boiler monitoring screens. The user may simply "walk" though boiler operation by repeatedly selecting the right or left "arrow" symbol. These screens are accessed by selected the "Status" button from the "Home" screen.

NOTE

Only visible if Zone Panel is connected. Zone Panel 1 and 2 shown typical for 1 through 4.

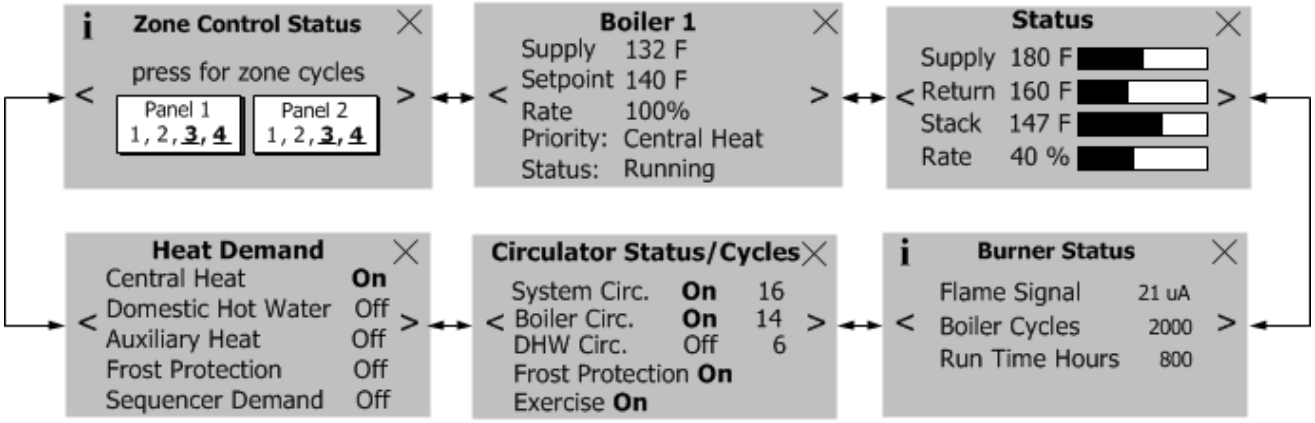

Figure 12.6: Status Screens

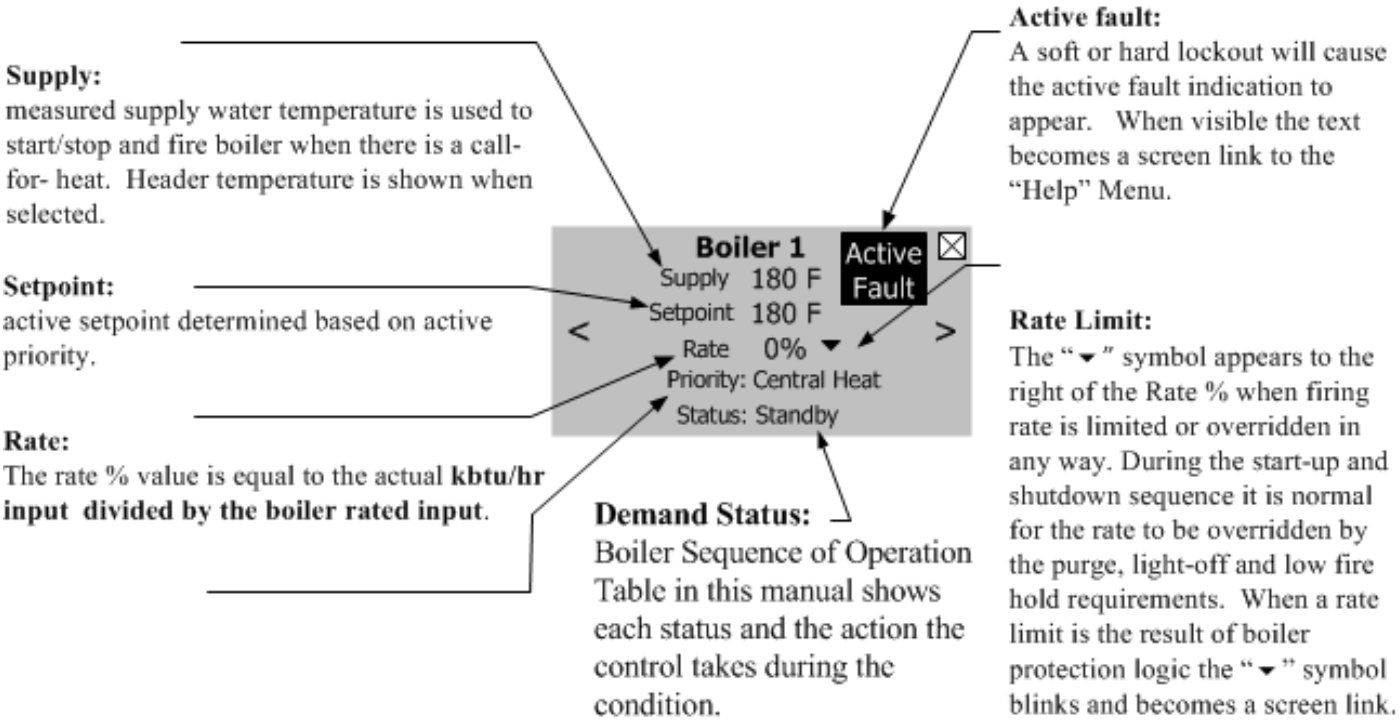

Figure 12.7: Boiler Status Screen Definitions

3. Status Screens (continued)

1. Status Screens (continued)

Bargraph Screen

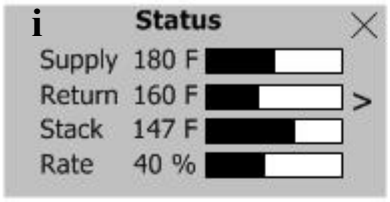

Bargraph Screen

The bargraph screen presents measured values for easy comparison. An information screen provides monitoring of "Rate Demand To Fan" and "Fan Speed Feedback". These additional monitoring points are provided to help monitor blower performance.

Circulator Status Screen

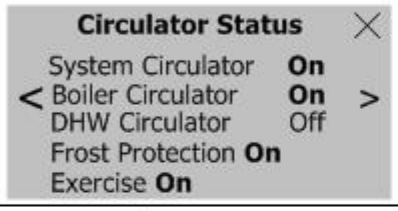

Pumping is a major part of any hydronic system. This screen provides the status of the boiler's demand to connected pumps as well as the status of Frost Protection and pump Exercise functions.

Heat Demand Screen

This screen provides the status of the boilers five (5) possible heat demands. When demand is off the Control has not detected the call-for-heat. This screen allows the user to determine which demands are present when more than one demand is present.

Burner Status Screen

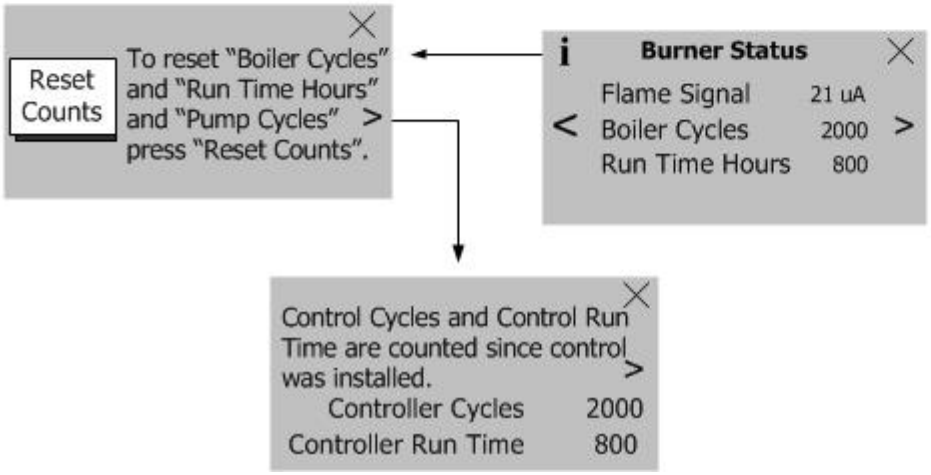

Cycles and Hours

Boiler cycles and hours are used to monitor the boilers overall compatibility to the heating load. Excessive cycling compared to run time may be an indication of pumping, boiler sizing or adjustment issues.

NOTE

"Boiler Cycle" and "Run Time Hours" are resettable by selecting the reset "button" located on the information screen.

The "Controller Cycles" and " Controller Run Time" data is not resettable and remains for the life of the control.

3. Status Screens (continued)

Zone Control Status Screens

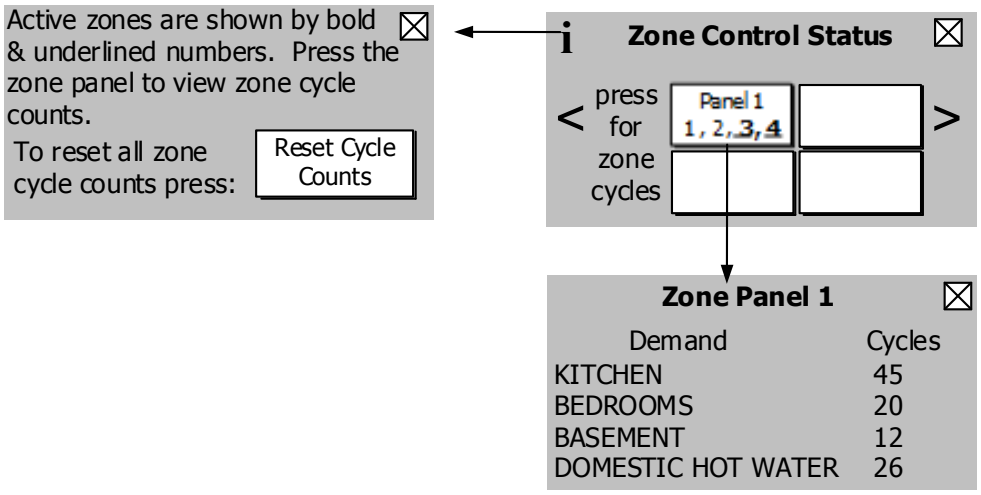

Zone Control Status

Screen provides status and a page links for up to four zone panels. Individual zone "on" status is shown by a bold zone number with a solid underscore. "Press" the zone control "button" to view individual zone cycles.

NOTE

Zone cycles are resettable by selecting the reset "button" located on the information screen.

NOTE

Only visible is Zone Panel is connected Zone Panel 1 and 2 shown typical for 1 through 4

4. Detail Screens

Detail screens are accessed by selecting the "Detail" button from the "Home" screen. These screens provide in depth operating parameter status such as "On Point", "Off Point" and "Setpoint Source" information. Demand-specific details are provided for Central Heat, Auxiliary Heat, Domestic Hot Water and the Sequence Master demands and outdoor air reset. Sequencer screens are only shown when the Sequence Master is enabled.

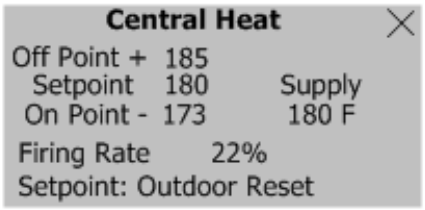

Demand Detail Display
(Central Heat shown, Typical for Auxiliary Heat, Domestic Hot Water and Sequencer Master)

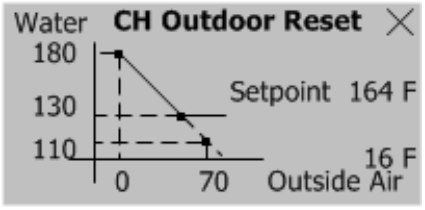

Outdoor Reset Display
(Central Heat shown,
Typical for Auxiliary Heat)

Figure 12.8: Detail Screen Overview

5. Multiple Boiler Sequencer Screens

When the Sequence Master is enabled the following screen is **available**:

The Sequencer Status screen is selected by "pressing" "Status" button from the "Home" screen when Sequence Master is enabled.

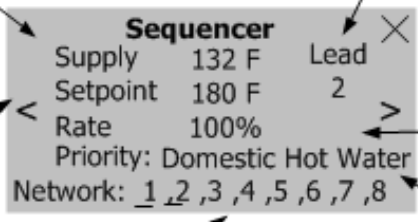

Header:
measured header water temperature is the temperature being used to start, stop and fire boiler when there is a call-for-heat.

Setpoint:
active setpoint temperature is the result of Outdoor Air Reset and Domestic Hot Water (DHW) selections.

Networked Boiler Status:
Provides connected, start sequence and firing rate status information for all connected boiler addresses. The boiler number is underlined if the boiler is running and blinks if the boiler has the start sequence in progress. For example the status for boiler address 1 is provided as follows:

1 - Boiler 1 is connected to the network
1 - "Blinking underline" - boiler 1 is starting
1 - "Solid underline" - boiler 1 is running

Lead Boiler:
Upon power up the lowest numbered boiler becomes the lead boiler. The lead boiler is the first to start and last to stop. The lead boiler is automatically rotated after 24 hours of run time. Additionally, the lead is rotated if there is a lead boiler fault.

Rate:
The rate % value is equal to the Sequence Master demand to the slave boilers.

Priority:
Sequencer Priority available are: Standby (no call for heat is present), Central Heat, Auxiliary Heat, Domestic Hot Water, Frost Protection or Warm Weather Shutdown.

F. Changing Adjustable Parameters

1. Entering Adjust Mode

The Control is factory programmed to include basic modulating boiler functionality. These settings are password protected to discourage unauthorized or accidental changes to settings. User login is required to view or adjust these settings:

- Press the "Adjust" button on the "Home" screen.
- Press the "Adjust" button on the Adjust Mode screen or Press "Service Contact" for service provider contact information.
- Press "Login" button to access password screen.
- Press 5-digit display to open a keypad. Enter the password (Installer Password is 86) and press the return arrow to close the keypad. Press the "Save" button.
- Press the "Adjust" button to enter Adjustment mode.

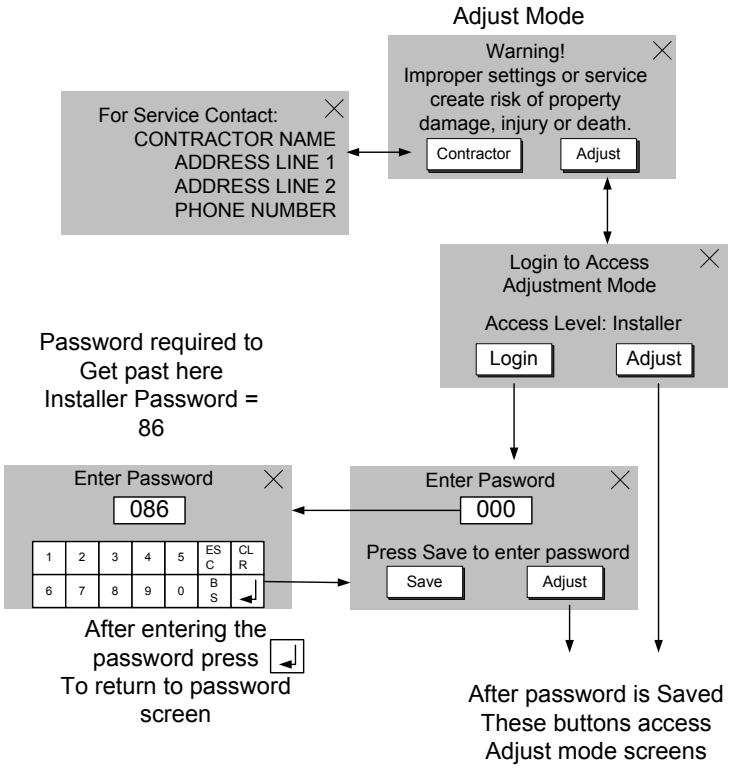

Figure 12.9: Adjust Mode Screens

2. Adjusting Parameters

Editing parameters is accomplished as follows:

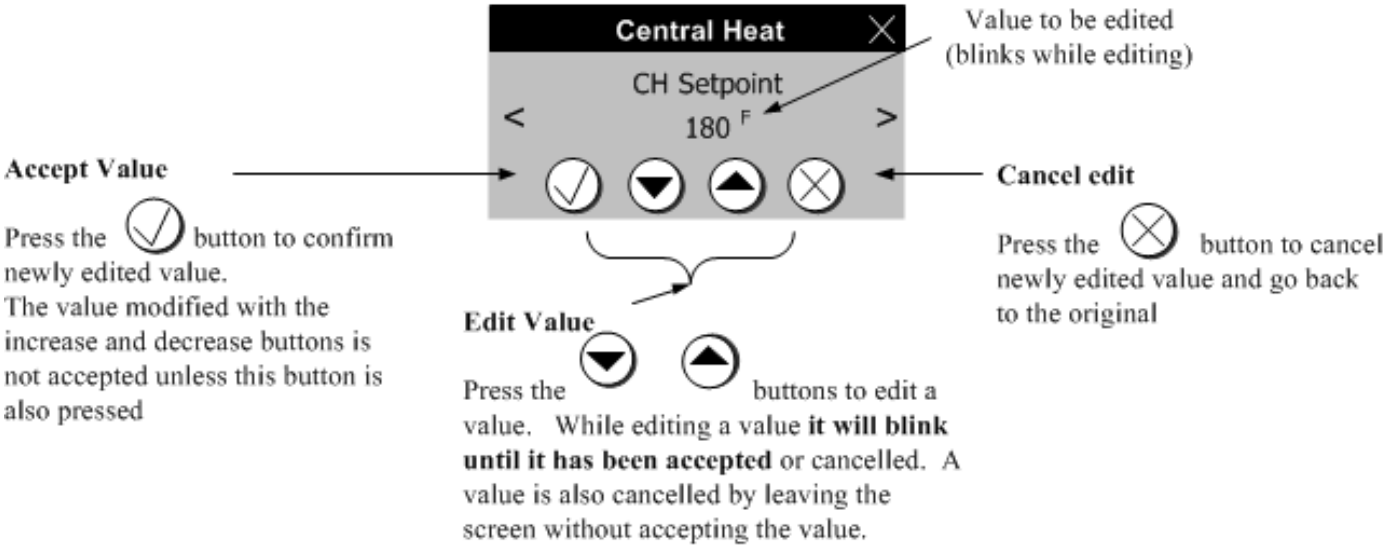

2. Adjusting Parameters (continued)

The following pages describe the Control's adjustable parameters. Parameters are presented in the order they appear on the Control's Display, from top to bottom and, left to right. From the "Home" screen select the Adjust button to access the adjustment mode screens show below (if required, refer to the previous page to review how to enter Adjustment mode):

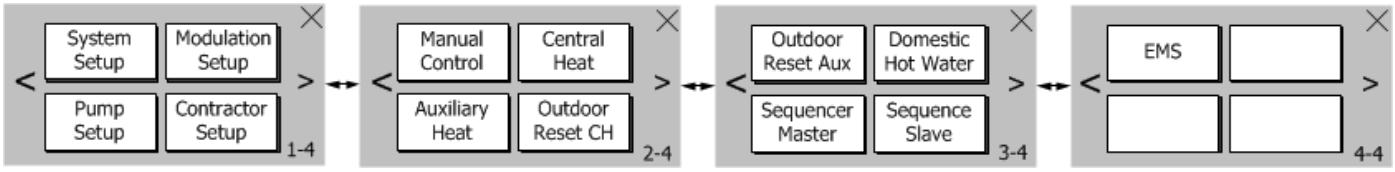

"Press" [System Setup] button to access the following parameters:

Factory Setting	Range / Choices	Parameter and Description
Fahrenheit	Fahrenheit, Celsius	**Temperature Units** The Temperature Units parameter determines whether temperature is represented in units of Fahrenheit or Celsius degrees.
Wired	Not Installed, Wired Wireless	**Outdoor Sensor Source** Not Installed Outdoor Sensor is not connected to the boiler, the sensor is not monitored for faults. Wired Outdoor Sensor is installed directly on the boiler terminal Strip. Wireless Outdoor sensor is installed and wireless.
Enabled	Enable/Disable	**Frost Protection** Disable Frost Protection is not used. Enable Boiler and system circulators start and boiler fires when low outside air, supply and return temperatures are sensed.
Disabled	Enable/Disable	**Warm Weather Shutdown Enable** Disable Warm Weather Shutdown (WWSD) is not used. Enable The boiler and pumps will not be allowed to start in response to a central heat call for heat if the outside temperature is greater than the WWSD setpoint. WWSD is initiated as soon as outside air temperature is above WWSD Setpoint. The control does not require call for heat to be satisfied. The boiler will still start in response to a Domestic Hot Water call for heat.
70°F	0-100°F	**Warm Weather Shutdown Setpoint*** The Warm Weather Shutdown (WWSD) Setpoint used to shutdown the boiler when enabled by the "WWSD Enable" parameter.

*Only visible when warm weather shutdown is enabled.

2. Adjusting Parameters (continued)

WARNING

Asphyxiation Hazard. Boiler type is factory set and must match the boiler model. Only change the boiler type setting if you are installing a new or replacement Control. The boiler type setting determines minimum and maximum blower speeds. Incorrect boiler type can cause hazardous burner conditions and improper operation that may result in PROPERTY LOSS, PHYSICAL INJURY OR DEATH.

"Press" Modulation Setup button to access the following parameters:

Factory Setting	Range / Choices	Parameter and Description
SeeTable 12.10	See Table 12.10	**Boiler Type** Boiler Size Setup To verify the boiler size selection, a qualified technician should do the following: **1. Check boiler's label for actual boiler size.** **2. Set "Boiler Type" to match actual boiler size.** **3. Select "Confirm".** The Boiler Type parameter changes multiple, minimum and maximum modulation settings. This parameter is intended to allow a user to set the parameters in a spare part Control to a particular boiler type. When changing the "Boiler Type" be sure to select "ENTER" and "NEXT" until all parameters are entered as shown by the "complete" indication.
100%	Minimum to Maximum Heat Rate	**Central Heat Maximum Expected Heat Rate** This parameter defines the highest modulation rate the Control will go to during a central heat call for heat. If the rated input of the installed home radiation is less than the maximum output of the boiler, change the Central Heat Maximum Expected Heat Rate (fan speed) setting to limit the boiler output accordingly.
100%	Minimum to Maximum Heat Rate	**Domestic Hot Water (DHW) Max Expected Heat Rate** This parameter defines the highest modulation rate the Control will go to during a Domestic Hot Water call for heat. If the rated input of the indirect water heater is less than the maximum output of the boiler, change the DHW Maximum Expected Heat Rate (fan speed) setting to limit the boiler output accordingly.
100%	Minimum to Maximum Heat Rate	**Auxiliary Maximum Expected Heat Rate** This parameter defines the highest modulation rate the Control will go to during the auxiliary heat call for heat. If the rated input of the Auxiliary Heat Zones is less than the maximum output of the boiler, change the Auxiliary Heat Maximum Expected Heat Rate (fan speed) setting to limit the boiler output accordingly.
100%	Minimum to Maximum Heat Rate	**DHW or Both DHW & CH** The "DHW or Both DHW & CH" parameter is the boiler's maximum modulation when DHW is being serviced simultaneously with Central Heat (CH) or Auxiliary Heat. This value must be set higher than the desired DHW Maximum Heat Rate. This parameter is active after DHW priority time or when priority is disabled.
40%	100 RPM to Maximum Heat Rate	**Zone 1 Expected Heat Rate (typical for zone 1 through 16)*** This parameter defines the highest modulation rate the Control will go to during the Zone 1 call for heat. If the rated input of the installed home radiation in zone 1 is less than the maximum output of the boiler, change the Zone 1 Expected Heat Rate (fan speed) setting to limit the boiler output accordingly.
15 Minutes	0 to 60 Minutes	**Zone Release Time*** After the Zone Release Time minutes and a zone has not been satisfied (thermostat opens) the measured heat loss will be released to increase to the Central Heat Maximum Heat Rate.
See Table 12.10	Minimum to Maximum	**Minimum Modulation** This parameter is the lowest modulation rate the Control will go to during any call for heat.
See Table 12.10	3000 - 4500 RPM	**Lightoff Rate** This is the blower speed during ignition and flame stabilization periods.

*Only visible when zone panel is connected.

Table 12.10: Parameters Changed Using the Boiler Type Parameter Selections:

Control Service Part Kit	107863-01					107863-02
Altitude	**0-2,000 ft.**					
Model	**RPTR085HB-02-N**	**RPTR110HB-02-N**	**RPTR155HB-02-N**	**RPTR155CB-02-N**	**RPTR205HB-02-N**	**RPTR270HB-02-N**
Maximum Heat Rate (RPM)	6,500	6,700	7,500	7,500	7,100	6,900
Minimum Heat Rate (RPM)	1,500	1,600	1,750	1,750	1,500	1,000
Default Light off Rate (RPM)	4,000	4,000	4,000	4,000	4,000	3,000
Model	**RPTR085HB-02-P**	**RPTR110HB-02-P**	**RPTR155HB-02-P**	**PRTR155CB-02-P**	**RPTR205HB-02-P**	**RPTR270HB-02-P**
Maximum Heat Rate (RPM)	6,400	6,500	6,950	6,950	7,100	6,800
Minimum Heat Rate (RPM)	1,650	1,700	1,800	1,800	1,500	1,000
Default Light off Rate (RPM)	4,000	4,000	4,000	4,000	4,000	3,000
Altitude	**2,0001-6,000 ft.**					
Model	**RPTR085HB-26-N**	**RPTR110HB-26-N**	**RPTR155HB-26-N**	**RPTR155CB-26-N**	**RPTR205HB-26-N**	**RPTR270HB-26-N**
Maximum Heat Rate (RPM)	8,150	8,750	8,450	8,450	8,200	8,900
Minimum Heat Rate (RPM)	1,725	1,800	1,900	1,900	1,500	2,050
Default Light off Rate (RPM)	4,000	4,000	4,000	4,000	4,000	3,000
Model	**RPTR085HB-26-P**	**RPTR110HB-26-P**	**RPTR155HB-26-P**	**RPTR155CB-26-P**	**RPTR205HB-26-P**	**RPTR270HB-26-N**
Maximum Heat Rate (RPM)	8,350	8,750	8,400	8,400	7,625	8,250
Minimum Heat Rate (RPM)	1,775	1,750	2,000	2,000	1,550	1,925
Default Light off Rate (RPM)	4,000	4,000	4,000	4,000	4,000	3,000

Table 12.10: Parameters Changed Using the Boiler Type Parameter Selections: (continued)

Control Service Part Kit	**107863-01**					**107863-02**
Altitude	**6,001-7,800 ft.**					
Model	**RPTR085HB-67-N**	**RPTR110HB-67-N**	**RPTR155HB-67-N**	**RPTR155CB-67-N**	**RPTR205HB-67-N**	**RPTR270HB-67-N**
Maximum Heat Rate (RPM)	8,450	8,800	8,500	8,500	8,250	9,000
Minimum Heat Rate (RPM)	1,800	1,800	1,900	1,900	1,500	2,050
Default Light off Rate (RPM)	4,000	4,000	4,000	4,000	4,000	3,000
Model	**RPTR085HB-67-P**	**RPTR110HB-67-P**	**RPTR155HB-67-P**	**RPTR155CB-67-P**	**RPTR205HB-67-P**	**RPTR270HB-67-P**
Maximum Heat Rate (RPM)	8,700	8,800	8,450	8,450	7,700	7,650
Minimum Heat Rate (RPM)	1,850	1,725	2,000	2,000	1,550	1,800
Default Light off Rate (RPM)	4,000	4,000	4,000	4,000	4,000	3,000
Altitude	**7,801-10,100 ft.**					
Model	**RPTR085HB-70-N**	**RPTR110HB-70-N**	**RPTR155HB-70-N**	**RPTR155CB-70-N**	**RPTR205HB-70-N**	**RPTR270HB-70-N**
Maximum Heat Rate (RPM)	8,800	8,850	8,550	8,550	8,300	8,750
Minimum Heat Rate (RPM)	1,850	1,800	1,900	1,900	1,650	2,025
Default Light off Rate (RPM)	4,000	4,000	4,000	4,000	4,000	3,000
Model	**RPTR085HB-70-P**	**RPTR110HB-70-P**	**RPTR155HB-70-P**	**RPTR155CB-70-P**	**RPTR205HB-70-P**	**RPTR270HB-70-P**
Maximum Heat Rate (RPM)	8,750	7,550	8,500	8,500	7,800	6,600
Minimum Heat Rate (RPM)	1,850	1,550	2,050	2,050	1,600	1,650
Default Light off Rate (RPM)	4,000	4,000	4,000	4,000	4,000	3,000

Expected Heat Rate Adjustment Screens (HeatMatch Software)

The Control is shipped with defaults that will provide improved operation. Adjustment is only required to optimize setup.

The expected heat rate adjustment is used to better match boiler output to the home heating needs. After receiving a "call for heat" the Control first uses the expected heat rate value to set a maximum heat rate. The maximum heat rate is the highest heat rate that the boiler can fire to at that moment. The maximum heat rate is the summation of the expected heat rates for the active (turned on) zones. After establishing the maximum heat rate the Control then measures water temperature and fires the boiler only as hard as required for the heat demand.

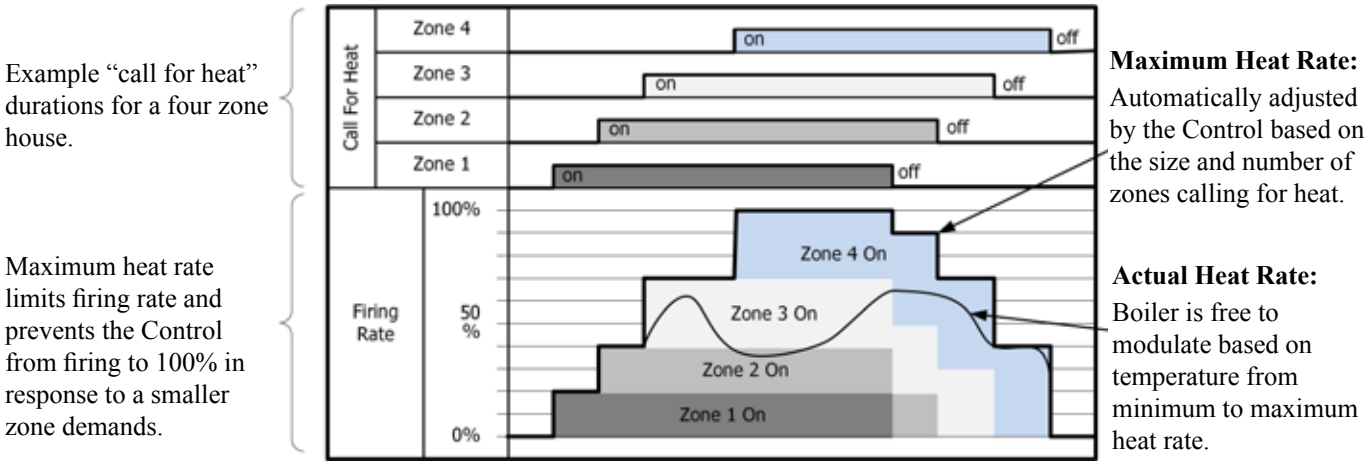

Figure 12.11: Four Zone House (with Zone Control Connected)

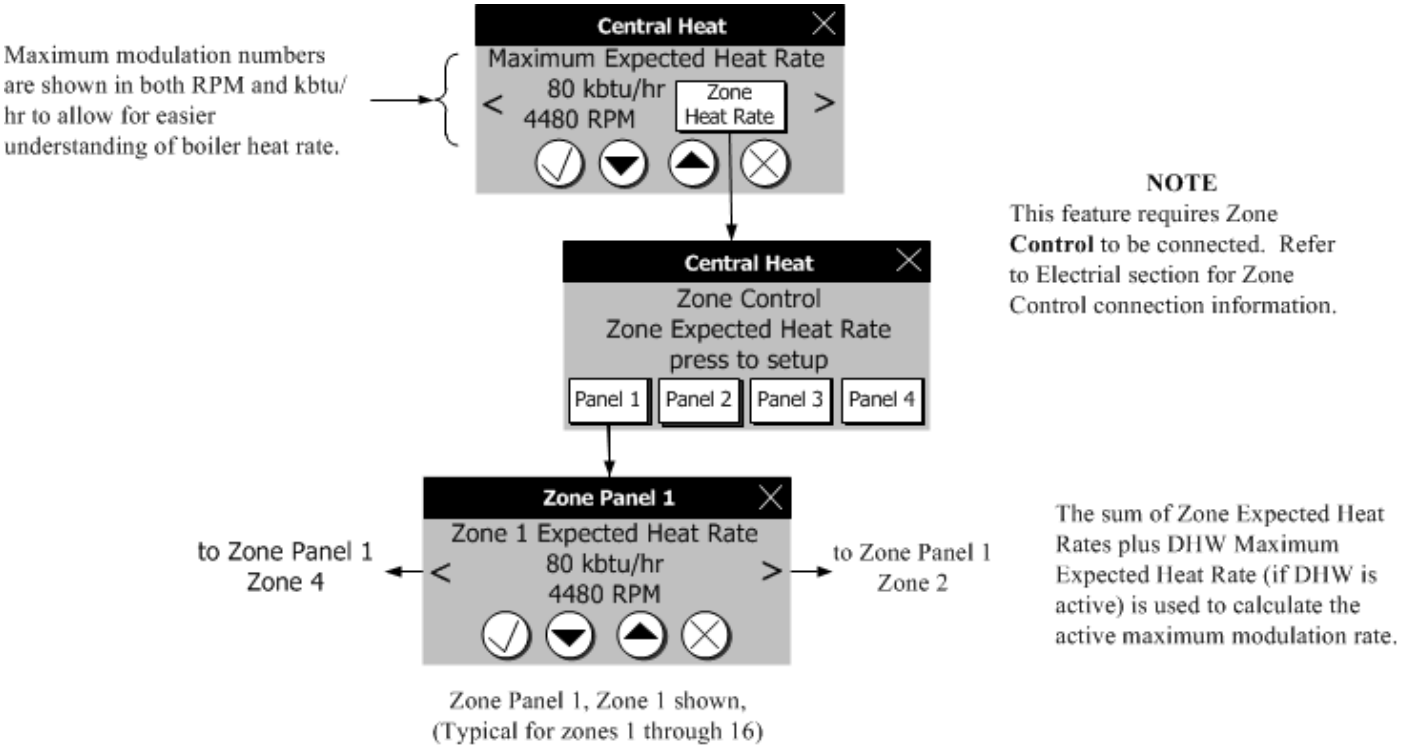

Figure 12.12: Expected Heat Rate Adjustment (with Zone Control Connected)

"Press" Pump Setup button to access the following parameters:

Factory Setting	Range / Choices	Parameter and Description
Central Heat, Optional Priority		**System Pump run pump for:** Activates the system pump output according to selected function.
	Never,	Never: Pump is disabled and not shown on status screen.
	Any Demand,	Any Demand: Pump Runs during any call for heat.
	Central Heat, No Priority,	Central Heat, No Priority: Pump Runs during central heat, auxiliary heat and frost protection call for heat. Pump does not start for a DHW call for heat and continues to run during Domestic Hot Water Priority.
	Central Heat, Optional Priority	Central heat, Optional Priority: Pump Runs during central heat, auxiliary heat and frost protection call for heat. Pump does not start for a DHW call for heat and will be forced off if there is a DHW call for heat and Domestic Hot Water Priority is active.
	Central Heat Only, Optional Priority:	Central Heat Only, Optional Priority: Pump runs during central heat and frost protection call for heat. Pump does not start for Auxiliary Heat or DHW call for heat. The pump will be forced off when DHW priority is active. This option allows the system pump output to be used as a zone pump.
Any Demand		**Boiler Pump run pump for:** Activates the boiler pump output according to selected function.
	Never	Never: Pump is disabled and not shown on status screen.
	Any Demand,	Any Demand: Pump Runs during any call for heat.
	Header Sensor Demand,	Header Sensor Demand: Pump Runs when boiler is firing and when there is DHW demand. Selected when Header Sensor is selected as modulation sensor and boiler is a stand alone boiler.
	CH, Off for DHW	CH, Off for DHW: Pump runs during central heat, auxiliary heat and frost protection call for heat and will be forced off if there is a DHW call for heat and DHW priority is active.
Primary Loop Pipe IWH		**Domestic Pump run pump for:** Activates the Domestic pump output according to selected function.
	Never,	Never: Pump is disabled and not shown on status screen.
	Primary Loop Piped IWH	Primary Loop Piped IWH: Pump Runs during domestic hot water call for heat. Domestic Hot Water Priority enable/disable does not affect pump operation.
	Boiler Piped IWH	Boiler Piped IWH: Pump runs during DHW demand. Pump is forced off during central heat demand when 1) DHW priority is disabled or 2) DHW priority is enabled and DHW demand has remained on for longer than Priority Time.
	Auxiliary Heat Loop:	Auxiliary Heat Loop: Pump runs during Auxiliary Heat and frost protection call for heat. Pump does not start for Central Heat or DHW call for heat. The pump will be forced off when DHW priority is active. This allows the DHW pump output to be used as a zone pump.

NOTICE

Combi pump parameters listed below are not field adjustable. See above table for parameter descriptions.

- **System Pump: Central Heat Optional Priority**
- **Boiler Pump: CH, Off for DHW**
- **Domestic Pump: Boiler Piped IWH**

Example Pump Parameter selections:

Single boiler with no Indirect Water Heater

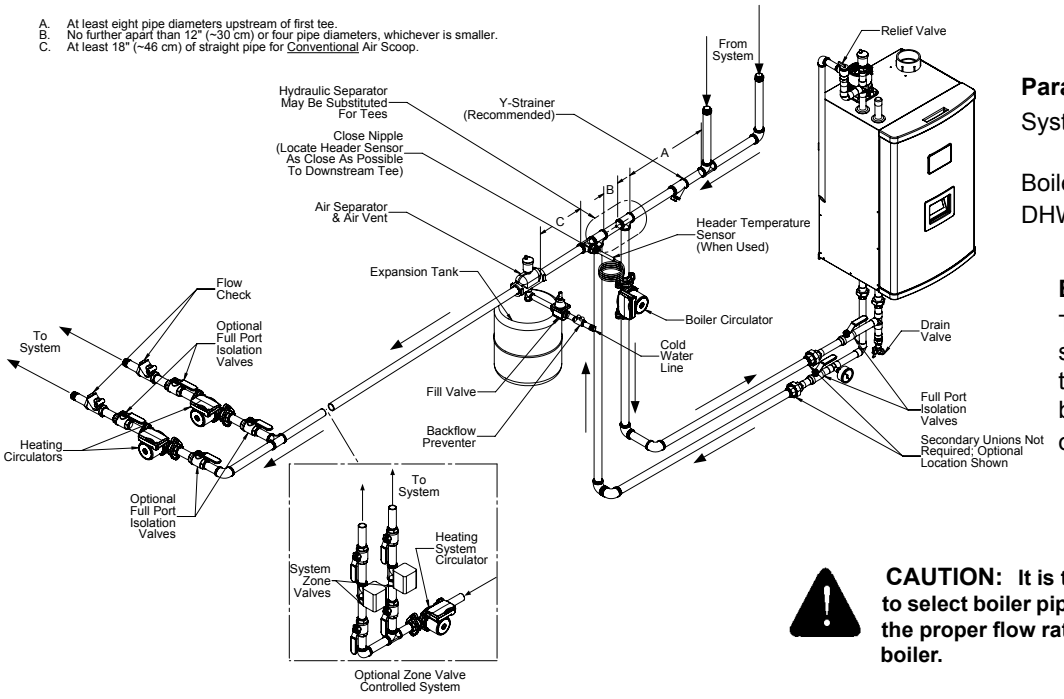

Parameter Selection:

System pump = "Central Heat, Optional Priority"

Boiler pump = "any demand"

DHW pump = "never"

Explanation:

This piping arrangement only services central heat. When there is any demand both boiler and system pumps turn on.

CAUTION: It is the installers responsibility to select boiler piping configurations that provide the proper flow rates and performance for the boiler.

Single boiler Indirect Water Heater (IWH)Piped to Primary, Optional Domestic Hot Water Priority.

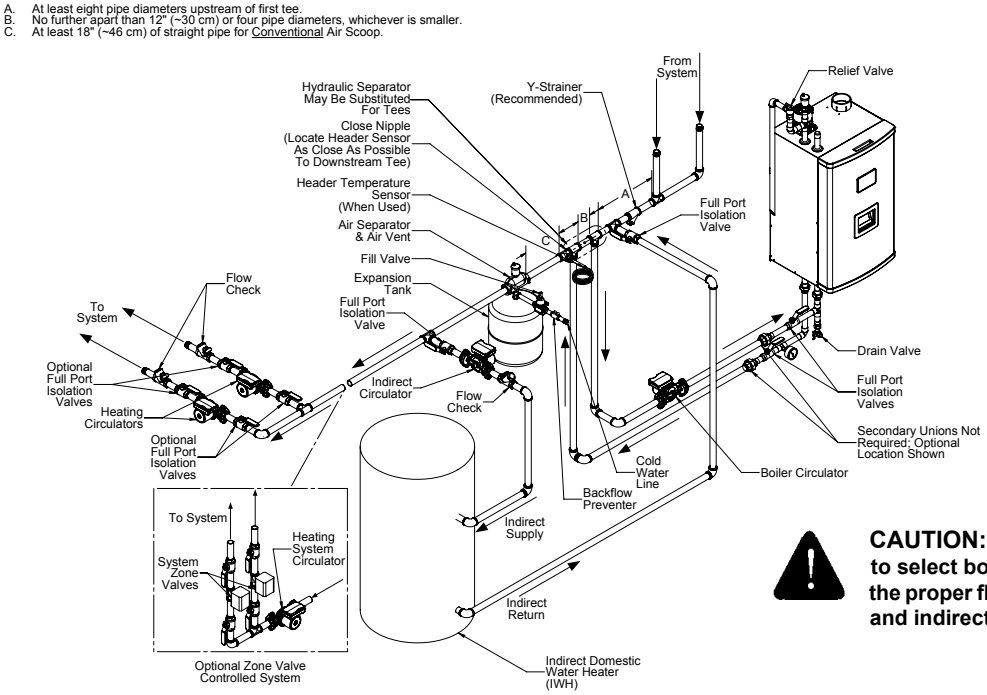

Parameter Selections:

System Pump = "Central Heat, Optional Priority"

Boiler Pump = "any demand"

DHW Pump = "Primary Loop Piped IWH"

DHW Priority Enable is optional

Explanation:

This piping arrangement permits the system pump to run or not run when there is a domestic hot water call for heat. Domestic hot water priority is optional. It is permissible for the domestic and system pumps to run at the same time. The boiler pump must run for every call for heat.

CAUTION: It is the installers responsibility to select boiler piping configurations that provide the proper flow rates and performance for the boiler and indirect water heater.

Example Pump Parameter selections (continued):

Single Boiler with Supply Piped IWH, System and DHW Wired to Master

A. At least eight pipe diameters upstream of first tee.
B. No further apart than 12" (~30 cm) or four pipe diameters, whichever is smaller.
C. At least 18" (~46 cm) of straight pipe for Conventional Air Scoop.

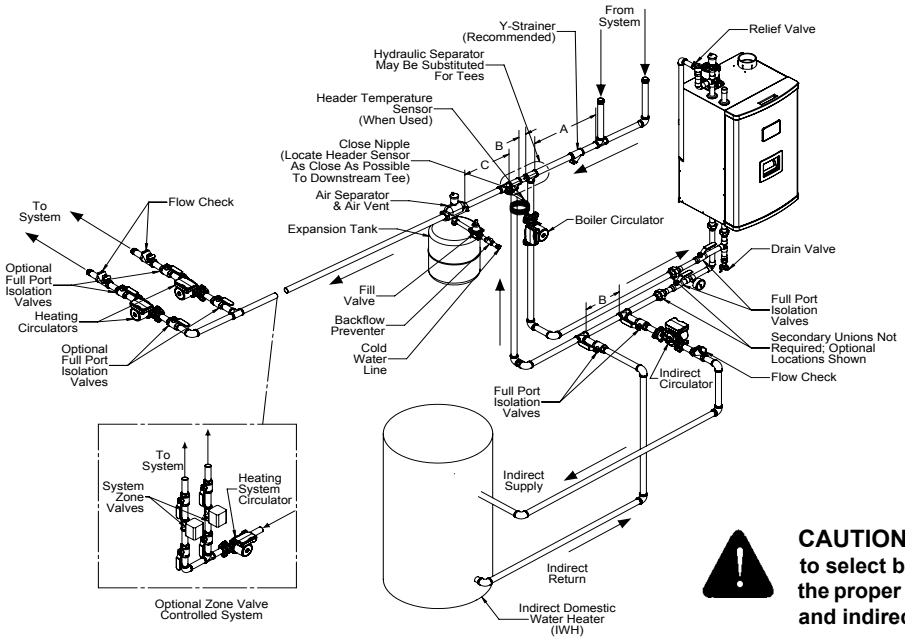

Parameter Selections:
System Pump = "Central Heat, Optional Priority"
Boiler Pump = "any demand"
DHW Pump = "Primary Loop Piped IWH"
DHW Priority Enable is optional

Explanation:
When call for Domestic Hot Water is received the DHW pump is turned on and the boiler pump is turned on. This piping arrangement permits the system pump to run or not run when there is a domestic hot water call for heat. Domestic hot water priority is optional. It is permissible for the domestic and system pumps to run at the same time. The boiler pump must run for every call for heat.

CAUTION: It is the installers responsibility to select boiler piping configurations that provide the proper flow rates and performance for the boiler and indirect water heater.

Single Boiler with Supply Piped IWH, Heating Top/Indirect Bottom Connection

A. At least eight pipe diameters upstream of first tee.
B. No further apart than 12" (~30cm) or four pipe diameters, whichever is smaller.
C. At least 18" (~46cm) of straight pipe for Conventional Air Scoop.

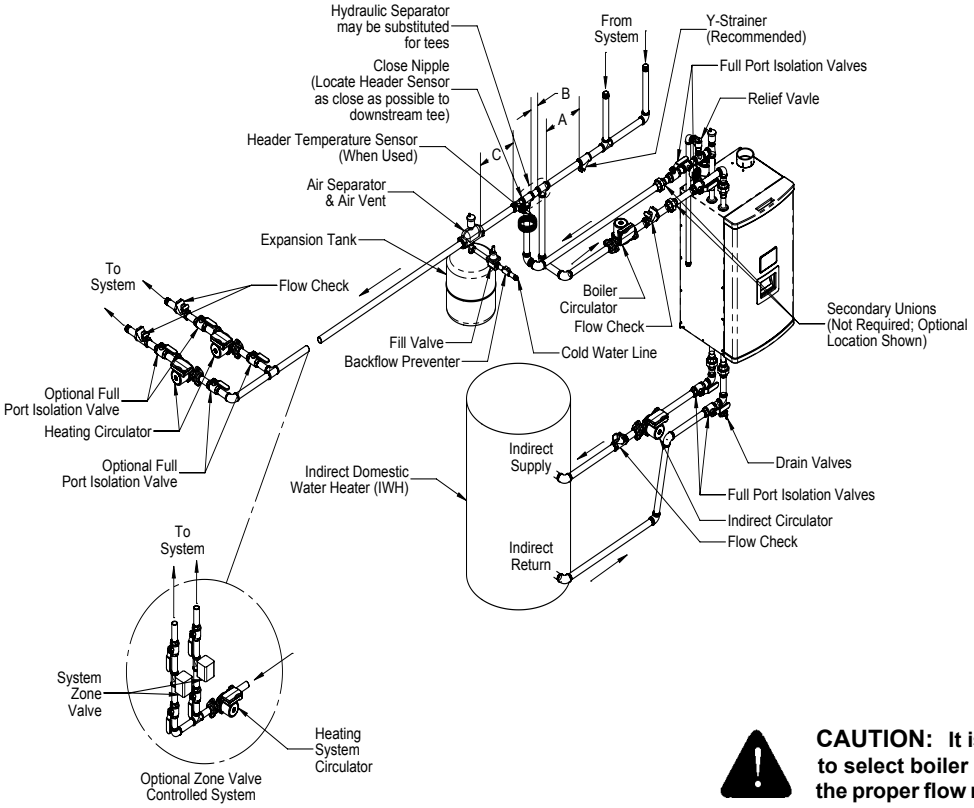

Parameter Selections:
System Pump = "Central Heat Optional Priority"
Boiler Pump = "CH, OFF for DHW"
DHW Pump = "Boiler Piped IWH"

Explanation:
Ensure boiler and DHW pump are sized to maintain flow through boiler within limits shown in Table 9.3. Only DHW pump runs during DHW demand. Only Boiler and System pumps run during CH, Auxiliary Heat, and Frost Protection demands. When there is CH demand and DHW demand has remained on longer than Priority Time, DHW pump is forced off and Boiler and System pump will start.

CAUTION: It is the installers responsibility to select boiler piping configurations that provide the proper flow rates and performance for the boiler and indirect water heater.

Example Pump Parameter selections (continued):

Multiple boilers IWH Piped to Primary, Optional Domestic Hot Water Priority

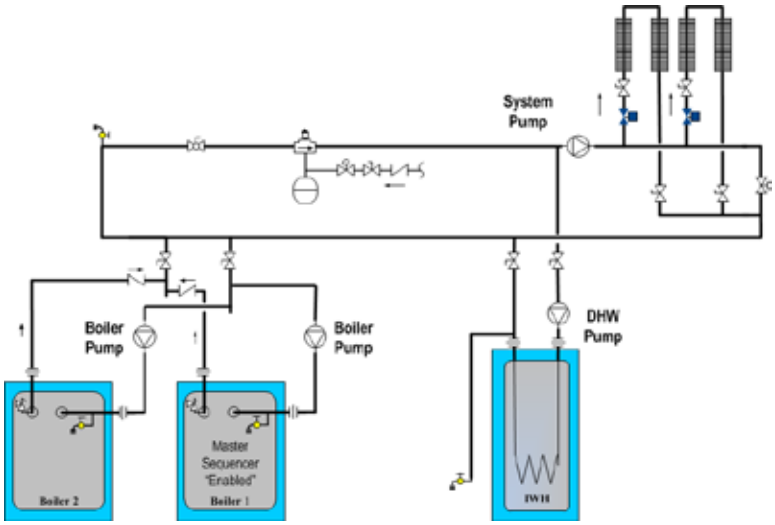

	Sequencer Master (Boiler 1)	Boiler 2
Wiring locations:		
Thermostat	X	
DHW call for heat	X	
System pump	X	
DHW pump	X	
Boiler Pump	X	X
Sequencer Master Parameter Selections:		
Sequencer Master	Enabled	
Indirect Water Heater	"Primary Piped"	
Pump Parameter Selections:		
System Pump =	Central Heat, Optional Priority	Never
Boiler Pump =	Any demand	Any demand
DHW Pump =	Primary Loop Piped IWH	Never

Explanation:
This piping arrangement permits the system pump to run or not run when there is a domestic hot water call for heat. Domestic hot water priority is optional. It is permissible for the domestic and system pumps to run at the same time. The boiler pump must run for every call for heat.

Multiple Boilers, IWH piped to primary, system pump required to run for any call for heat

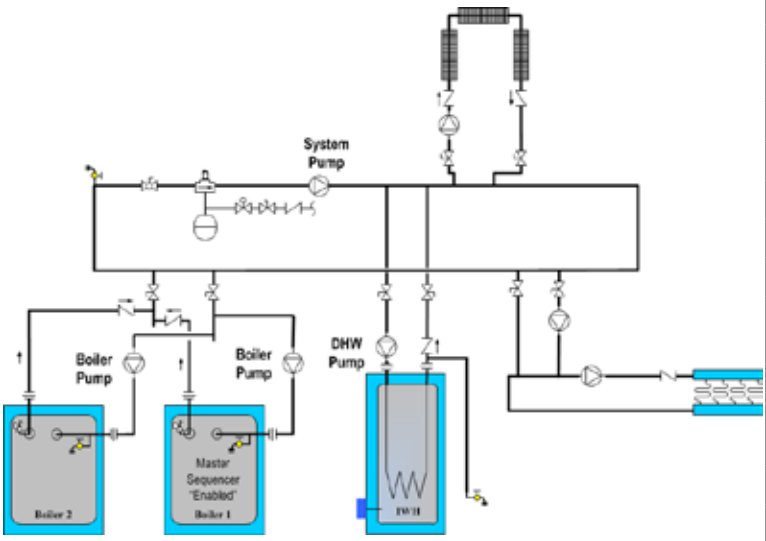

	Sequencer Master (Boiler 1)	Boiler 2
Wiring locations:		
Thermostat	X	
DHW call for heat	X	
System pump	X	
DHW pump	X	
Boiler Pump	X	X
Sequencer Master Parameter Selections:		
Sequencer Master	Enabled	
Indirect Water Heater	"Primary Piped"	
Pump Parameter Selections:		
System Pump =	Any demand	Never
Boiler Pump =	Any demand	Any demand
DHW Pump =	Primary Loop Piped IWH	Never

Explanation:
This piping arrangement requires the system pump to be running for any calls for heat. Also the boiler pump must run for any call for heat.

"Press" Contractor Setup button to access the following parameters:

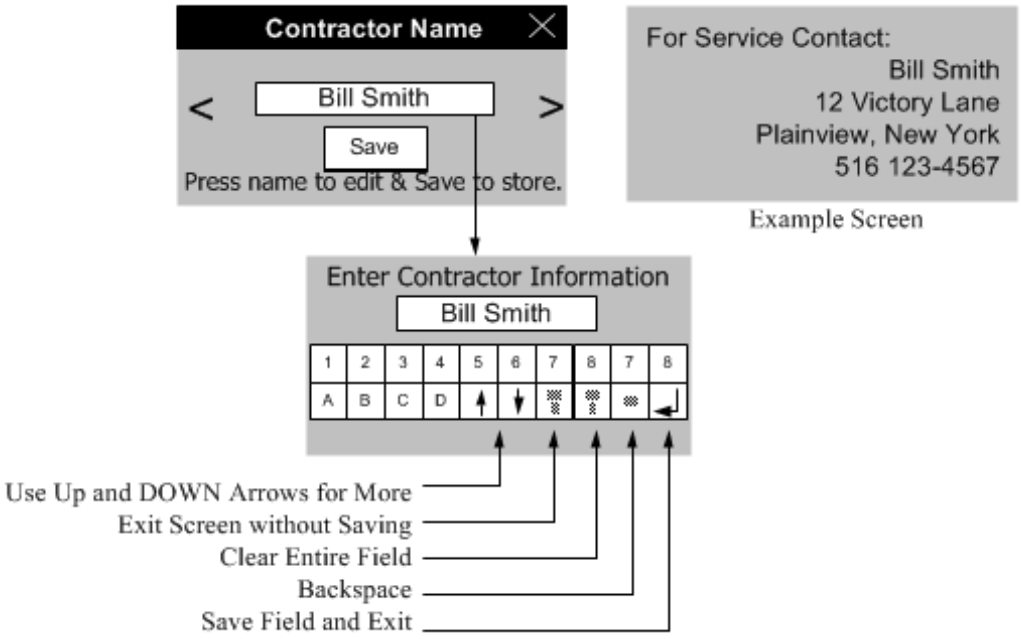

Factory Setting	Range / Choices	Parameter and Description
Contractor Name	User defined	Contractor Name
Address Line 1	User defined	Contractor Address Line 1
Address Line 2	User defined	Contractor Address Line 2
Phone	User defined	Contractor Phone

"Press" Manual Control button to access the following screen:

The Manual Speed Control speed screen allows the technician to set firing rate at low or high speed for combustion testing.

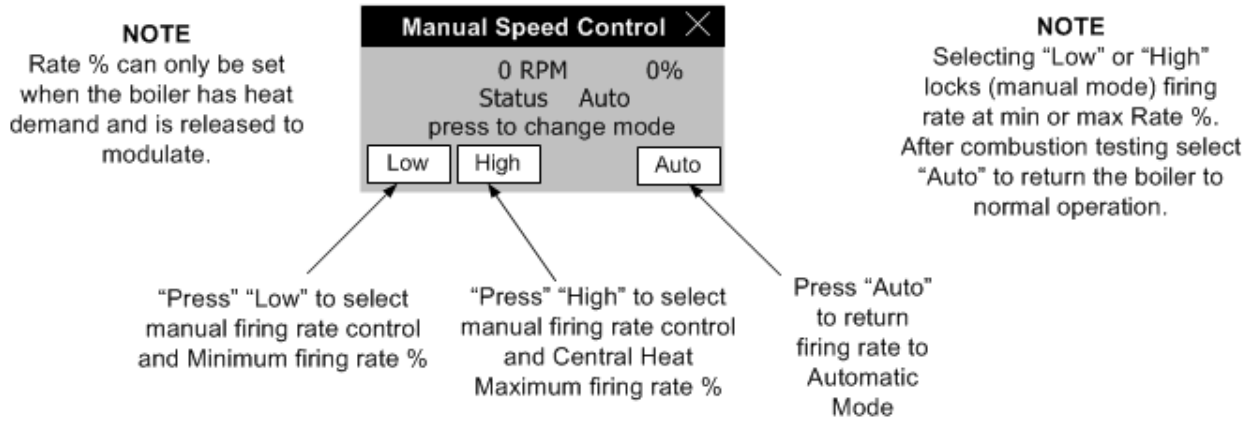

"Press" Central Heat button to access the following parameters:

Factory Setting	Range / Choices	Parameter and Description
180°F (82.2°C)	60°F to 190°F (16°C to 87.8°C)	**Central Heat Setpoint** Target temperature for the central heat priority. Value also used by the outdoor air reset function.
10°F (5.6°C)	2°F to 25°F (1.1°C to 14°C)	**Central Heat Diff Above** The boiler stops when the water temperature rises 'Diff Above' degrees above the setpoint. **NOTE** Never set the Diff Above such that the Setpoint plus the 'Diff Above' is greater than 200°F. the result may be nuisance manual reset hard lockouts. For example, if the setpoint is 180°F, the maximum 'Diff Above' is 20°F. Further, if the setpoint is 190°F, the maximum 'Diff Above' is 10°F.
5°F (2.8°C)	2°F to 25°F (1.1°C to 14°C)	**Central Heat Diff Below** The boiler starts when the water temperature drops 'Diff Below' degrees below the setpoint.
3	1 to 5	**Response Speed** This parameter adjusts the Central Heat temperature controller Proportion Integral Derivative (PID) values. Higher values cause a larger firing rate change for each degree of temperature change. If set too high firing rate "overshoots" required value, increases to high fire causing the temperature to exceed the "Diff Above" setpoint and cycle the boiler unnecessarily. Lower values cause a smaller firing rate change for each degree of temperature change. If set too low, the firing rate response will be sluggish and temperature will wander away from setpoint.
30 seconds	0 to 300 seconds	**Low Fire Hold Time** "Low Fire Hold Time" is the number of seconds the control will wait at low fire modulation rate before being released to modulate. After ignition and flame stabilization periods the firing rate is held at low fire for "Low Fire Hold Time". This delay allows heat to travel out to the system and provide system feedback prior to the control modulating firing rate.
Supply Sensor	Supply Sensor, Header Sensor	**Modulation Sensor** Heat Demand may respond to the boiler's Supply Temperature or Header Temperature sensors. When Header Sensor is selected the boiler is fired in response to the sensor wired to Header Sensor Low Voltage Terminal Block Terminals.

"Press" Auxiliary Heat button to access the following parameters:

Factory Setting	Range / Choices	Parameter and Description
180°F (82.2°C)	60°F to 190°F (16°C to 87.8°C)	**Auxiliary Heat Setpoint** Target temperature for the Auxiliary Heat priority. Value also used by the outdoor air reset function.
10°F (5.6°C)	2°F to 25°F (1.1°C to 14°C)	**Auxiliary Heat Diff Above** The boiler stops when the water temperature rises 'Diff Above' degrees above the setpoint. **NOTE** Never set the Diff Above such that the Setpoint plus the 'Diff Above' is greater than 200°F. the result may be nuisance manual reset hard lockouts. For example, if the setpoint is 180°F, the maximum 'Diff Above' is 20°F. Further, if the setpoint is 190°F, the maximum 'Diff Above' is 10°F.
5°F (2.8°C)	2°F to 25°F (1.1°C to 14°C)	**Auxiliary Heat Diff Below** The boiler starts when the water temperature drops 'Diff Below' degrees below the setpoint.
3	1 to 5	**Response Speed** This parameter adjusts the Auxiliary Heat temperature controller Proportion Integral Derivative (PID) values. Higher values cause a larger firing rate change for each degree of temperature change. If set too high firing rate "overshoots" required value, increases to high fire causing the temperature to exceed the "Diff Above" setpoint and cycle the boiler unnecessarily. Lower values cause a smaller firing rate change for each degree of temperature change. If set too low, the firing rate response will be sluggish and temperature will wander away from setpoint.
Disable	Disable, Enable	**Auxiliary Priority Over Central Heat** This parameter allows the Auxiliary Heat demand to be higher or lower priority than Central Heat demand. When both demands are active at the same time the Control uses the Setpoint, Diff Above and Diff Below for the demand that has priority. Disabled Auxiliary Heat is lower priority than Central Heat demand. Enable Auxiliary Heat is higher priority than Central Heat demand.
DHW Demand	Auxiliary Heat, DHW Demand	**DHW Terminal Use** The Control's "DHW Temp Switch" input terminal may be used as a Domestic Hot Water (DHW) demand or Auxiliary Heat demand. When the "DHW Terminal Use" is set to Auxiliary Heat a contact closure sensed at the DHW terminal will cause an Auxiliary Heat to call for heat. DHW Demand: DHW Heat demand may be wired to DHW Terminal. Auxiliary Heat: Auxiliary Heat demand may be wired to DHW Terminal.
Supply Sensor	Supply Sensor, Header Sensor	**Modulation Sensor** Heat Demand may respond to the boiler's Supply Temperature or Header Temperature sensors. When Header Sensor is selected the boiler is fired in response to the sensor wired to Header Sensor Low Voltage Terminal Block Terminals.

"Press" Domestic Hot Water button to access the following parameters:

Factory Setting	Range / Choices	Parameter and Description
170°F (76.7°C)	60°F to 190°F (16°C to 87.8°C)	**Domestic Hot Water Setpoint** The Domestic Hot Water (DHW) Setpoint parameter is used to create a minimum boiler water temperature setpoint that is used when DHW heat demand is "on". When the DHW heat demand is not "on" (the contact is open or not wired) this setpoint is ignored.
10°F (5.6°C)	2°F to 25°F (1.1°C to 14°C)	**Domestic Hot Water Diff Above** The boiler stops when the water temperature rises 'Diff Above' degrees above the setpoint.
5°F (2.8°C)	2°F to 25°F (1.1°C to 14°C)	**Domestic Hot Water Diff Below** The boiler starts when the water temperature drops 'Diff Below' degrees below the setpoint.
3	1 to 5	**Response Speed** This parameter adjusts the Domestic Hot Water temperature controller Proportion Integral Derivative (PID) values. Higher values cause a larger firing rate change for each degree of temperature change. If set too high firing rate "overshoots" required value, increases to high fire causing the temperature to exceed the "Diff Above" setpoint and cycle the boiler unnecessarily. Lower values cause a smaller firing rate change for each degree of temperature change. If set too low, the firing rate response will be sluggish and temperature will wander away from setpoint.
10 seconds	0 to 300 seconds	**Low Fire Hold Time** "Low Fire Hold Time" is the number of seconds the control will wait at low fire modulation rate before being released to modulate. After ignition and flame stabilization periods the firing rate is held at low fire for "Low Fire Hold Time". This delay allows heat to travel out to the indirect water heater and provide feedback prior to the control modulating firing rate.
Enable	Enable Disable	**Domestic Hot Water Priority (DHWP)** When Domestic Hot Water Priority is Enabled and Domestic Hot Water (DHW) heat demand is "on" the DHW demand will take "Priority" over home heating demand. When the System and Boiler pumps are configured as "Central Heat (off DHW priority)" or "Central Heat, Optional Priority" then they will be forced "off" during DHW Priority. Priority protection time is provided to end DHWP in the event of a failed or excessive long DHW demand.
60	30 to 120 Minutes	**Priority Time** When DHWP is Enabled the Priority Time Parameter appears and is adjustable.
DHW Demand	Auxiliary Heat, DHW Demand	**DHW Terminal Use** The Control's "DHW Temp Switch" input terminal may be used as a Domestic Hot Water (DHW) demand or Auxiliary Heat demand. When the "DHW Terminal Use" is set to Auxiliary Heat a contact closure sensed at the DHW terminal will cause an Auxiliary Heat to call for heat. DHW Demand: DHW Heat demand may be wired to DHW Terminal. Auxiliary Heat: Auxiliary Heat demand may be wired to DHW Terminal.

NOTICE

Except for Priority Time, Combi Domestic Hot Water parameters are not field adjustable. See above for parameter descriptions.

- **Priority Time: 60 minutes (default)**

"Press" Outdoor Reset Central Heat button to access the following parameters:

Factory Setting	Range / Choices	Parameter and Description
Enabled	Enable Disable	**Central Heat Outdoor Reset Enable** If an outdoor sensor is installed and Outdoor Reset is Enabled, the boiler will automatically adjust the heating zone set point temperature based on the outdoor reset curve in Figure 12.13. The maximum set point is defined by the Central Heat Setpoint [factory set to 180°F (82.2°C)] when the outdoor temperature is 0°F (-18°C) or below. The minimum set point temperature shown is 130°F (54.4°C) [adjustable as low as 80°F (26.7°C)] when the outdoor temperature is 50°F (10°C) or above. As the outdoor temperature falls the supply water target temperature increases. For example, if the outdoor air temperature is 30°F, (-1.1°C) the set point temperature for the supply water is 150°F (65.6°C). Disable Do Not Calculate setpoint based on outdoor temperature Enable Calculate the temperature setpoint based on outdoor temperature using a reset curve defined by Low Outdoor Temp, High Outdoor Temp, Low Boiler Water Temp, Min Boiler Temp and Central Heat Setpoint and Boost Time parameters.
0°F (-18°C)	-40°F to 100°F (-40°C to 37.8°C)	**Central Heat Low Outdoor Temperature** The Low Outdoor Temperature parameter is also called "Outdoor Design Temperature". This parameter is the outdoor temperature used in the heat loss calculation. It is typically set to the coldest outdoor temperature.
70°F (21.1°C)	32°F to 100°F (0°C to 37.8°C)	**Central Heat High Outdoor Temperature** The High Outdoor Temperature parameter is the outdoor temperature at which the Low Boiler Water Temperature is supplied. This parameter is typically set to the desired building temperature.
110°F (43.3°C)	70°F to 190°F (21.1°C to 87.8°C)	**Central Heat Low Boiler Water Temperature** The Low Boiler Water Temperature parameter is the operating setpoint when the High Outdoor Temperature is measured. If the home feels cool during warm outdoor conditions, the Low Boiler Water Temperature parameter should be increased.
130°F (54.4°C)	80°F to 190°F (26.7°C to 87.8°C)	**Minimum Boiler Temperature (Central Heat and Auxiliary Heat)** The Minimum Boiler Temperature parameter sets a low limit for the Reset setpoint. Set this parameter to the lowest supply water temperature that will provide enough heat for the type radiation used to function properly. Always consider the type of radiation when adjusting this parameter.
20 Minutes	0-1800 Seconds (0-30 Minutes)	**Central Heat Boost Time** When the Central Heat Setpoint is decreased by Outdoor Reset settings, the Boost Time parameter is used to increase the operating setpoint when the home heat demand is not satisfied after the Boost Time setting is exceeded. When heat demand has been "on" continuously for longer than the Boost Time parameter the operating setpoint is increased by 10°F (5.6°C). The highest operating setpoint from Boost Time is current Central Heat Setpoint. A setting of 0 seconds disables this feature. Boost is not used when Sequence Master is enabled.

"Press" Outdoor Reset Aux button to access the following parameters:

Factory Setting	Range / Choices	Parameter and Description
Enabled	Enable Disable	**Auxiliary Heat Outdoor Reset Enable** If an outdoor sensor is installed and Outdoor Reset is Enabled, the boiler will automatically adjust the heating zone set point temperature based on the outdoor reset curve in Figure 12.13. The maximum set point is defined by the Central Heat Setpoint [factory set to 180°F (82.2°C)] when the outdoor temperature is 0°F (-18°C) or below. The minimum set point temperature shown is 130°F (54.4°C) [adjustable as low as 80°F (26.7°C)] when the outdoor temperature is 50°F (10°C) or above. As the outdoor temperature falls the supply water target temperature increases. For example, if the outdoor air temperature is 30°F, (-1.1°C) the set point temperature for the supply water is 150°F (65.6°C). Disable Do Not Calculate setpoint based on outdoor temperature Enable Calculate the temperature setpoint based on outdoor temperature using a reset curve defined by Low Outdoor Temp, High Outdoor Temp, Low Boiler Water Temp, Min Boiler Temp and Central Heat Setpoint and Boost Time parameters.
0°F (-18°C)	-40°F to 100°F (-40°C to 37.8°C)	**Auxiliary Heat Low Outdoor Temperature** The Low Outdoor Temperature parameter is also called "Outdoor Design Temperature". This parameter is the outdoor temperature used in the heat loss calculation. It is typically set to the coldest outdoor temperature.
70°F (21.1°C)	32°F to 100°F (0°C to 37.8°C)	**Auxiliary Heat High Outdoor Temperature** The High Outdoor Temperature parameter is the outdoor temperature at which the Low Boiler Water Temperature is supplied. This parameter is typically set to the desired building temperature.
110°F (43.3°C)	70°F to 190°F (21.1°C to 87.8°C)	**Auxiliary Heat Low Boiler Water Temperature** The Low Boiler Water Temperature parameter is the operating setpoint when the High Outdoor Temperature is measured. If the home feels cool during warm outdoor conditions, the Low Boiler Water Temperature parameter should be increased.
20 Minutes	0-1800 Seconds (0-30 Minutes)	**Auxiliary Heat Boost Time** When the Auxiliary Heat Setpoint is decreased by Outdoor Reset settings, the Boost Time parameter is used to increase the operating setpoint when the home heat demand is not satisfied after the Boost Time setting is exceeded. When heat demand has been "on" continuously for longer than the Boost Time parameter the operating setpoint is increased by 10°F (5.6°C). The highest operating setpoint from Boost Time is current Auxiliary Heat Setpoint. A setting of 0 seconds disables this feature.

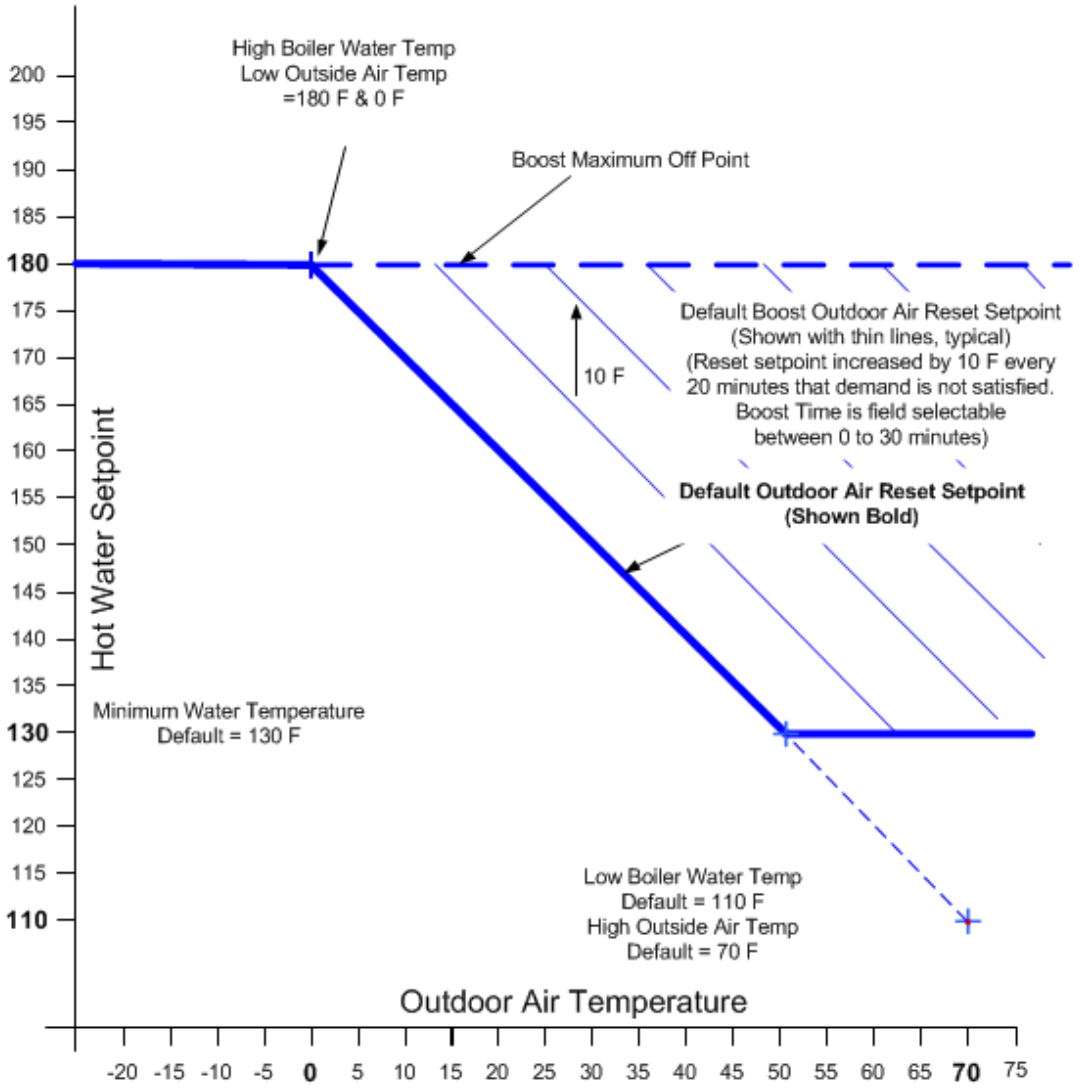

Figure 12.13: Outdoor Reset Curve

Central Heat Setpoint	Heating Element Type		Central Heat Setpoint	Heating Element Type	
180°F to 190°F (82.2°C to 87.8°C)	Fan Coil		100°F to 140°F (37.8°C to 60°C)	In Slab Radiant High Mass Radiant	
160°F to 190°F (71.1°C to 87.8°C)	Convection Baseboard Fin Tube Convective	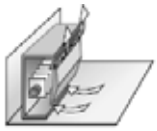	130°F to 160°F (54.4°C to 71.1°C)	Staple-up Radiant Low Mass Radiant	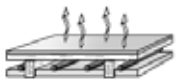
130°F to 160°F (54.4°C to 71.1°C)	Radiant Baseboard		140°F to 160°F (60°C to 71.1°C)	Radiators	

"Press" Sequencer Master button to access the following parameters:

Factory Setting	Range / Choices	Parameter and Description
Disable	Enable, Disable	**Master Enable/Disable** The Sequencer Master Enable/Disable is used to "turn on" the Multiple Boiler Controller. Warning! enable ONLY one Sequence Master.
Boiler Piped	Boiler Piped, Primary Piped	**Indirect Water Heater (IWH)** Boiler Piped — Sequencer to respond to an Isolated DHW demand that is piped to a single boiler. The individual boiler goes on "Leave" from the Sequencer Master and goes to DHW Service. Primary Piped — The Sequence Master responds to the DHW Call For Heat. This allows one or more boilers to provide heat to the IWH.
Disabled	Enable, Disable	**DHW Two Boiler Start** The Sequencer will immediately start two boilers for a DHW call for heat. Used when DHW is the largest demand. Only visible when primary piped IWH is selected.
180 Secs	120 - 1200 Secs	**Boiler Start Delay** Slave boiler time delay after header temperature has dropped below the setpoint minus "Diff below" setpoint. Longer time delay will prevent nuisance starts due to short temperature swings.
195°F (90.6°C)	Central Heat Setpoint, 195°F (90.6°C)	**Stop All Boilers Setpoint** When this temperature is reached all boilers are stopped. This setpoint allows the Sequencer to respond to rapid load increases.
70%	50% - 100%	**Base Load Common Rate** To maximize condensing boiler efficiency, the firing rate is limited to an adjustable value. Boilers are kept at or below this firing rate as long as the boilers can handle the load. After last available boiler has started, the modulation rate limit is released up to 100%.
3	1-5	**Response Speed** This parameter adjusts the Sequence Master temperature controller Proportion Integral Derivative (PID) values. Higher values cause a larger firing rate change for each degree of temperature change. If set too high firing rate "overshoots" required value, increases to high fire causing the temperature to exceed the "Diff Above" setpoint and cycle the boiler unnecessarily. Lower values cause a smaller firing rate change for each degree of temperature change. If set too low, the firing rate response will be sluggish and temperature will wander away from setpoint.

"Press" Sequence Slave button to access the following parameters:

Factory Setting	Range / Choices	Parameter and Description
None	1-8	**Boiler Address** Each boiler must be given a unique address. When "Normal" slave selection order is used, the boiler address is used by the Master Sequencer as the boiler start order. The boiler address is also the Modbus Address when a Energy Management System is connected.
Normal	Use Boiler First, Normal, Use Boiler Last	**Slave Selection Order** "Use Boiler First"; places the Slave in the lead permanently. "Normal"; firing order follows boiler number (1,2,3,..) order. "Use Boiler Last"; places the slave last in the firing order.

"Press" EMS button to access the following parameters:

Factory Setting	Range / Choices	Parameter and Description
Local	Local, 4-20mA	**Central Heat Modulation Source** This parameter enables the 4-20mA input to control firing rate and the thermostat input to control boiler on/off demand directly without using the internal setpoint. The 4-20mA selection is used to enable a remote multiple boiler controller: Local: 4-20mA Input on Control Terminals J8-6 and J10-8 is ignored. 4-20mA 4-20mA Input on Control Terminals J8-6 and J10-8 is used to control firing Rate % directly. Modbus Modbus input used to control firing Rate % directly.
Local	Local, 4-20mA	**Central Heat Setpoint Source** Sets the remote (Energy Management System) control mode as follows: Local: Local setpoint and modulation rate is used. 4-20mA input on Control Terminals J8-6 and J10-8 is ignored. 4-20mA 4-20mA Input on Control Terminals J8-6 and J10-8 is used as the temperature setpoint. The following two parameters may be used to adjust the signal range. Modbus Modbus is used as the temperature setpoint.
130°F (54.4°C)	80°F (26.7°C) - Central Heat Setpoint	**Central Heat 4-20mAdc Setup, 4 mA Water Temperature*** Sets the Central Heat Temperature Setpoint corresponding to 4mA for signal input on Control Terminals J8-6 and J10-8. Current below 4mA is considered invalid, (failed or incorrect wired input).
180°F (82.2°C)	80°F (26.7°C) - Central Heat Setpoint	**Central Heat 4-20mAdc Setup, 20 mA Water Temperature*** Sets the Central Heat Temperature Setpoint corresponding to 20mA for signal input on Control Terminals J8-6 and J10-8. Current above 20mA is considered invalid, (failed or incorrect wired input).
Local	Local, Modbus	**Central Heat Demand Source** This parameter enables a Modbus input to be take the place of the Heating Thermostat Input: Local Local Heating Thermostat input is used for Central Heat demand. Modbus Modbus input is used for Central Heat demand.

* Only visible when Central Heat Setpoint Source is set to 4-20mA.

Important Product Safety Information
Refractory Ceramic Fiber Product

WARNING

The Service Parts list designates parts that contain refractory ceramic fibers (RCF). RCF has been classified as a possible human carcinogen. When exposed to temperatures above 1805°F, such as during direct flame contact, RCF changes into crystalline silica, a known carcinogen. When disturbed as a result of servicing, these substances become airborne and, if inhaled, may be hazardous to your health.

AVOID Breathing Fiber Particulates and Dust

Precautionary Measures:

Do not remove or replace RCF parts or attempt any service work involving RCF without wearing the following protective gear:

1. A National Institute for Occupational Safety and Health (NIOSH) approved respirator
2. Long sleeved, loose fitting clothing
3. Gloves
4. Eye Protection

- Take steps to assure adequate ventilation.
- Wash all exposed body areas gently with soap and water after contact.
- Wash work clothes separately from other laundry and rinse washing machine after use to avoid contaminating other clothes.
- Discard used RCF components by sealing in an airtight plastic bag. RCF and crystalline silica are not classified as hazardous wastes in the United States and Canada.

First Aid Procedures:

- If contact with eyes: Flush with water for at least 15 minutes. Seek immediate medical attention if irritation persists.
- If contact with skin: Wash affected area gently with soap and water. Seek immediate medical attention if irritation persists.
- If breathing difficulty develops: Leave the area and move to a location with clean fresh air. Seek immediate medical attention if breathing difficulties persist.
- Ingestion: Do not induce vomiting. Drink plenty of water. Seek immediate medical attention.

WARNING

Asphyxiation Hazard. Fire Hazard. Explosion Hazard. This boiler requires regular maintenance and service to operate safely. Follow the instructions contained in this manual.

Improper installation, adjustment, alteration, service or maintenance can cause property damage, personal injury or loss of life. Read and understand the entire manual before attempting installation, start-up operation, or service. Installation and service must be performed only by an experienced, skilled, and knowledgeable installer or service agency.

DANGER

Explosion Hazard. Electrical Shock Hazard. Burn Hazard. This boiler uses flammable gas, high voltage electricity, moving parts, and very hot water under high pressure. Assure that all gas and electric power supplies are off and that the water temperature is cool before attempting any disassembly or service.

Do not attempt any service work if gas is present in the air in the vicinity of the boiler. Never modify, remove or tamper with any control device.

WARNING

This boiler must only be serviced by skilled and experienced service technicians.

If any controls are replaced, they must be replaced with identical models.

Read, understand and follow all the instructions and warnings contained in all the sections of this manual.

If any electrical wires are disconnected during service, clearly label the wires and assure that the wires are reconnected properly.

Never jump out or bypass any safety or operating control or component of this boiler.

Assure that all safety and operating controls and components are operating properly before placing the boiler back in service.

Annually inspect all vent gaskets and replace any exhibiting damage or deterioration.

Burn Hazard. This boiler contains very hot water under pressure. Do not unscrew any pipe fittings nor attempt to disconnect any components of this boiler without positively assuring the water is cool and has no pressure. Always wear protective clothing and equipment when installing, starting up or servicing this boiler to prevent scald injuries. Do not rely on the pressure and temperature gauges to determine the temperature and pressure of the boiler. This boiler contains components which become very hot when the boiler is operating. Do not touch any components unless they are cool.

Respiratory Hazard. Boiler materials of construction, products of combustion and the fuel contain alumina, silica, heavy metals, carbon monoxide, nitrogen oxides, aldehydes and/or other toxic or harmful substances which can cause death or serious injury and which are known to the state of California to cause cancer, birth defects and other reproductive harm. Always use proper safety clothing, respirators and equipment when servicing or working nearby the appliance.

Failure to follow all instructions in the proper order can cause personal injury or death. Read all instructions, including all those contained in component manufacturers manuals which are provided with the boiler before installing, starting up, operating, maintaining or servicing.

All cover plates, enclosures and guards must be in place at all times.

NOTICE

Warranty does not cover boiler damage or malfunction if the following steps are not performed at the intervals specified.

1) **Continuously**:

   a. **Keep the area around the boiler** free from combustible materials, gasoline and other flammable vapors and liquids.
   b. **Keep the area around the combustion air inlet terminal** free from contaminates.
   c. **Keep the boiler room ventilation openings** open and unobstructed.

2) **Monthly Inspections**:

   a. **Inspect the vent piping and outside air intake piping** to verify they are open, unobstructed and free from leakage or deterioration. Call the service technician to make repairs if needed.
   b. **Inspect the condensate drain system** to verify it is leak tight, open and unobstructed. Call the service technician if the condensate drain system requires maintenance.
   c. **Inspect the water and gas lines** to verify they are free from leaks. Call the service technician to make repairs if required.

NOTICE

Water leaks can cause severe corrosion damage to the boiler or other system components. Immediately repair any leaks found.

4) **Annual Inspections and Service**: In addition to the inspections listed above, the following should be performed by a service technician once every year.

   a. **Follow the procedure** for turning the boiler off found in the Operating Instructions, Section XI "Start-up and Checkout".
   b. **Turn off all power** to the boiler.
   c. **Inspect the wiring** to verify the conductors are in good condition and attached securely.

⚠ CAUTION / ATTENTION

Electrical Shock Hazard. Label all wires prior to disconnection when servicing controls. Wiring errors can cause improper and dangerous operation. Verify proper operation after servicing.

Au moment de l´entretien des commandes, étiquetez tous les fils avant de les débrancher. Les erreurs de câblage peuvent nuire au bon fonctionnement et être dangereuses. S´assurer que l´appareil fonctionne adéquatement une fois k´entretien terminé.

   d. **Verify that the gas shutoff** shown in Figure 8.1 is closed.
   e. **Disconnect the flexible gas line** at the gas valve flare connection (Figure 13.1).

⚠ WARNING

Fire Hazard. Explosion Hazard. Always use a back-up wrench on the flare connection when making or breaking this connection as shown in Figure 13.1. Failure to do so can cause adjacent threaded connections to loosen or damage to the gas valve. Check all internal gas piping for leaks any time it is disconnected or disturbed during servicing.

   f. **Unplug the electrical connection** to the gas valve.
   g. **Disconnect the air proving switch tube** from the gas valve outlet tap.
   h. **Unplug the power and speed control cables** from the blower.

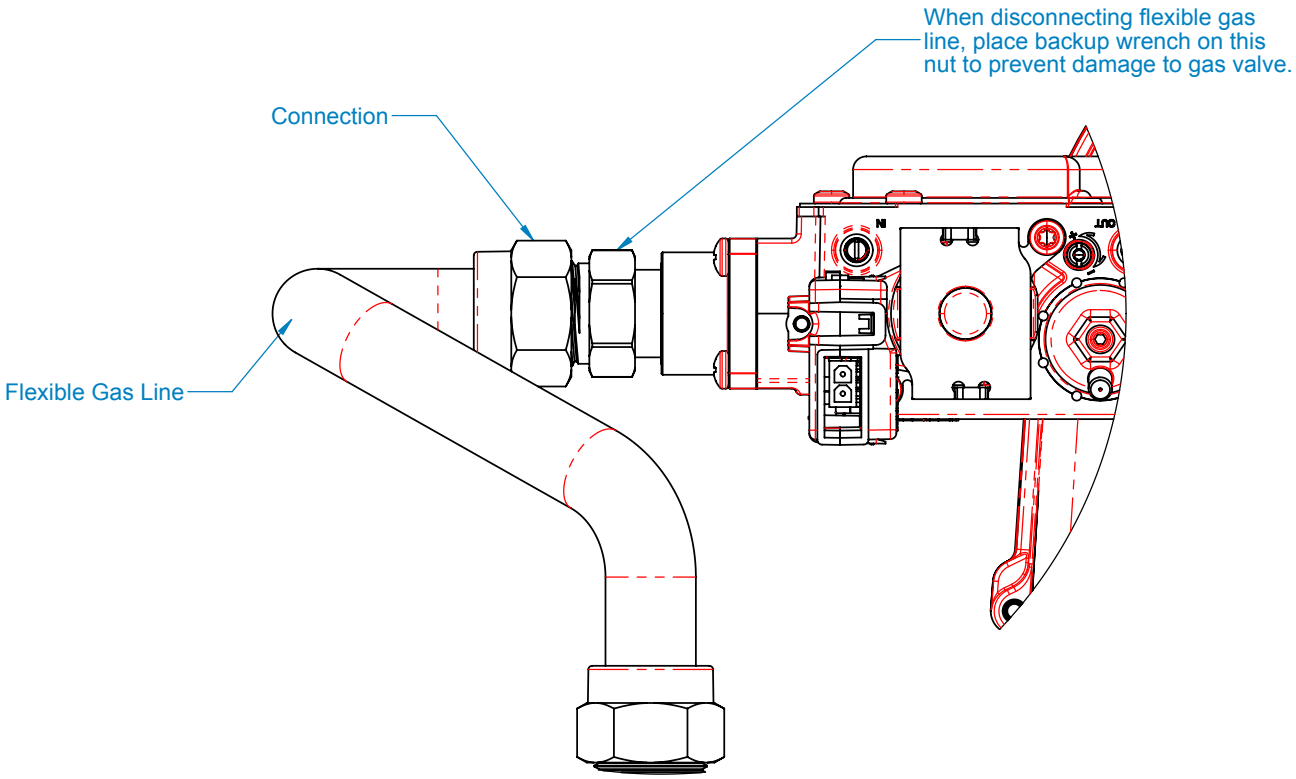

Figure 13.1: Disconnecting Flexible Gas Line

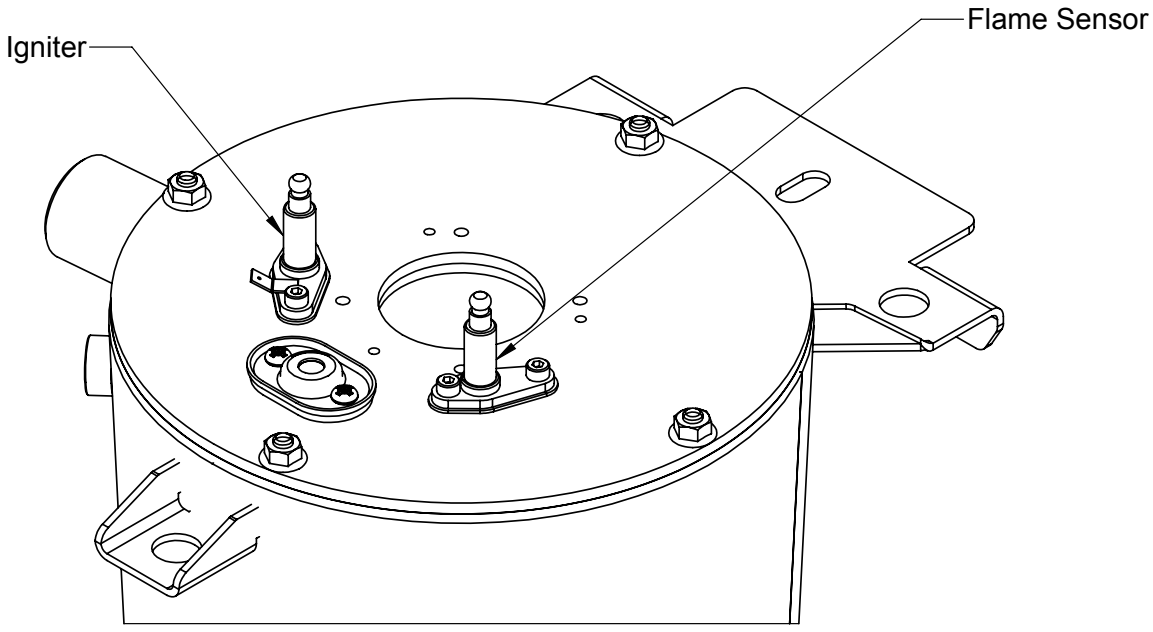

Figure 13.2: Igniter and Flame Sensor Location

i. **Unplug the igniter, ground, and flame sensor wires** from the ignition electrode and the flame sensor (Figure 13.2).

j. **Use a 10 mm wrench to remove** fire door to the heat exchanger (Figure 13.2). Carefully remove the door/blower/gas valve assembly from the heat exchanger, being careful not to damage the refractory insulation on the inside of the door (see Refractory Warning on page 136) or the electrodes.

k. **Inspect the heat exchanger combustion chamber and vacuum** any debris found. If necessary, combustion chamber may be brushed with a nonabrasive, nonmetallic brush. Do not use cleaning agents, solvents, acid or alkali products of any type to clean the heat exchanger .

l. **Inspect the burner for heat damage** or other deterioration. Use compressed air to clean off dust or debris from ports.

m. **Inspect igniter electrode and flame sensor** for deposits. Clean any found with steel wool. Do not use sand paper or Emory cloth for this cleaning. Inspect the ceramic portion of both of these parts for cracks and replace if any are found. Verify that the igniter gap is within the range shown in Figure 13.3.

n. **Inspect the blower gas valve assembly**, looking for dust, lint, or other debris that may have been drawn into this assembly. Excessive deposits may be vacuumed out.

Inspect all rubber and plastic components on the blower/gas valve assembly, looking for deterioration. Replace blower and/or gas valve if deterioration is found.

o. **Inspect and clean the condensate trap**. Place a bucket under the condensate cleanout cap on the bottom of the boiler to catch water in the trap. Unscrew the cap. Flush any debris found in the trap with water – do not use other cleaning agents. Reassemble the trap as shown in Figure 13.4.

⚠ WARNING

Asphyxiation Hazard. Do not operate the boiler without the float switch in place. Doing so could result in flue gas leakage into the indoors resulting in personal injury or death from Carbon Monoxide (CO) poisoning.

NOTICE

Attempting to clean the heat exchanger or trap with anything other than water could result in condensate backup, causing the boiler to shut-down.

q. **Reinstall the fire door/blower/gas valve assembly**, following the above steps in reverse order.

⚠ CAUTION

Do not over tighten fire door mounting nuts. Doing so could break the fire door mounting studs. If any of these studs are damaged, the heat exchanger must be replaced. Use of a short 10 mm box wrench will reduce the risk of damaging these studs.

r. **Inspect the vent system to verify that**:

- All gaskets and joints between the boiler heat exchanger and terminal are leak tight.
- All supports are intact and vent system is properly pitched
- All pipe is in good condition. Look for damage such as cracks, heat distortion, discoloration, and embrittlement. If any such damage is found, the pipe must be replaced and the cause of the damage identified and corrected.
- Vent/Intake terminals are in good condition, free from blockages, and still correctly located relative to doors, windows, decks, etc.
- There is no gasoline, flammable liquids/vapors, or halogen based products stored in the vicinity of the vent or inlet terminals. Also verify that there are no chemical products containing chlorine, chloride based salts, chlorofluorocarbons, paint removers, cleaning solvents, or detergents stored near the air intake terminal.

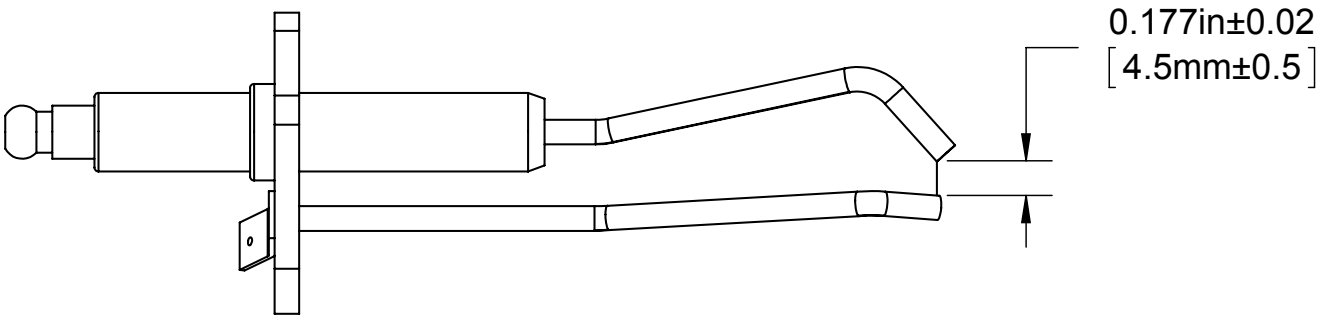

Figure 13.3: Igniter Gap

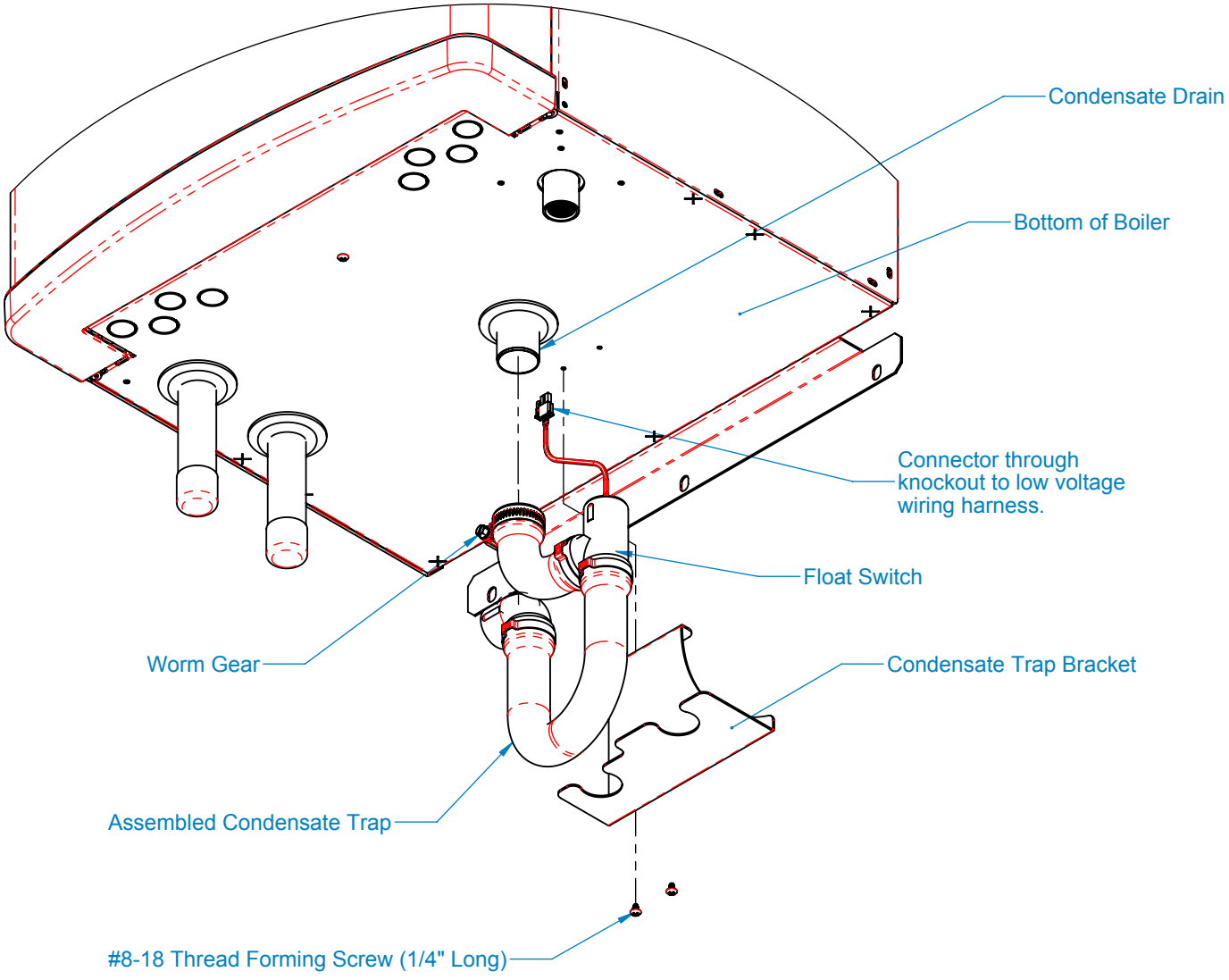

Figure 13.4: Condensate Trap Exploded Parts View

Refer Section VII "Venting" to re-assemble any vent system components that are disassembled during this inspection and for details on supporting, pitching, and terminating the vent system.

s. **Reconnect any wiring** which has been disconnected.

t. **Inspect the hydronic system**. Look for leaks and repair any found. If system contains antifreeze, or other additives, test and/or maintain them as directed by the additive manufacturer. Refer to Section XI "Start-up and Checkout" for important information on boiler water and the use of boiler water additives.

u. **Inspect air vent(s)** in hydronic piping. Ensure vents are unobstructed and properly functioning.

CAUTION

If burner comes on with no flow through the boiler. Turn the boiler off immediately. Failure to do so could cause severe heat exchanger damage.

v. **Follow ALL instructions in** Section XI "Start-up and Checkout" to place the boiler back in service, including the performance of a combustion test.

Outdoor Air Temperature Sensor
Temperature versus Resistance
(P/N 102946-01)

(10kOhm NTC Sensor)

Outdoor Temperature		Ohms of Resistance
°F	°C	
-20	-28.9	106926
-10	-23.3	80485
0	-17.8	61246
10	-12.2	47092
20	-6.7	36519
30	-1.1	28558
40	4.4	22537
50	10.0	17926
60	15.6	14356
70	21.1	11578
76	24.4	10210
78	25.6	9795
80	26.7	9398
90	32.2	7672
100	37.8	6301
110	43.3	5203
120	48.9	4317

Supply, Return and Flue Temperature Sensor
and Header Temperature Sensor
(P/N 101935-01 or 103104-01)
Temperature versus Resistance

(10kOhm NTC Sensor), Beta of 3950

Temperature		Ohms of Resistance
°F	°C	
32	0	32648
50	10	19898
68	20	12492
77	25	10000
86	30	8057
104	40	5327
122	50	3602
140	60	2488
158	70	1752
176	80	1256
194	90	916
212	100	697
248	120	386

XIV. Troubleshooting

WARNING

Electrical Shock Hazard. Turn off power to boiler before working on wiring.

A. Troubleshooting problems where no error code is displayed.

Condition	Possible Cause
Boiler not responding to call for heat, “Status” and “Priority” show “Standby”.	Boiler is not seeing call for heat. Check thermostat or zone wiring for loose connection, miswiring, or defective thermostat/zone control.
Boiler not responding to a call for heat, “Status” shows “Standby” and “Priority” shows Central Heat or Domestic Hot Water.	Boiler is not firing, temperature is greater than setpoint. Water flow through boiler primary loop non-existent or too low.
Boiler Running but System or Boiler Circulator is not running	• Check wiring for loose connection, miswiring. • When there is a Domestic Hot Water Heat Request the System or Boiler pumps will be forced “off” when there “Run Pump for” parameter is set to “Central heat, off DHW demand” or “Central Heat, Optional Priority”. This has been set to allow all of the heat to be provided for fast indirect water heater recovery. After one hour of “priority protection” or the end of the Domestic Hot Water Heat Request the system and boiler pumps will be free to run.
Home is cold during mild weather days	• Increase Low Boiler Water Temperature parameter 5°F (2.8°C) per day.
Home is cold during cold weather days	• Increase High Boiler Water Temperature parameter 5°F (2.8°C) per day

B. Display Faults:

Faults are investigated by selecting the “Help” button from the “Home” screen. When a fault is active the “Help” button flashes and the home screen turns a red color. Continue to select flashing buttons to be directed to the Fault cause.

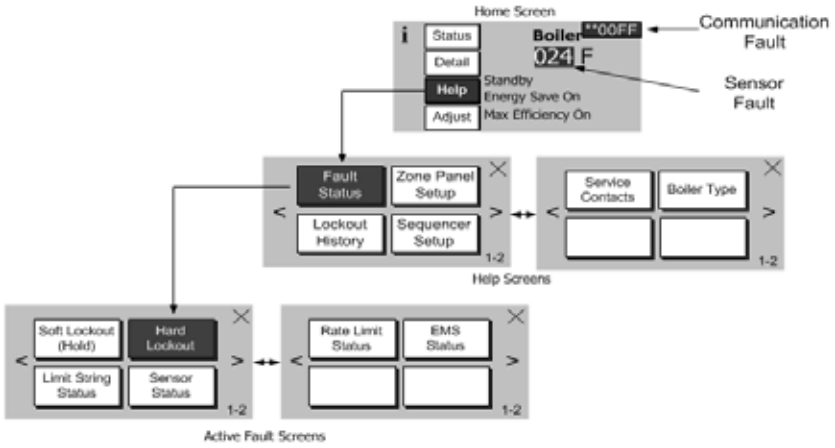

Figure 14.1: Help Menu

Indication	Condition	Possible Cause
Display Completely Dark Fan off, LWCO lights off, no green power light on Control	No 120Vac Power at Boiler	Check breaker and wiring between breaker panel and boiler. - Blown high voltage fuse, Replacement Fuse Kit, part number 105349-01.
Display Completely Dark, Fan running	No 24Vac Power to Control	- Loose 120Vac connection wiring between boiler J-Box and transformer - Loose 24 Vac connection wiring between transformer and Control. - Blown low voltage fuse, Replacement Fuse Kit, part number 105349-01.
Blinking Green power light on Control	Control Fault	- The green light is connected to internal power supply. The power supply is repeatedly starting and stopping (not normal) making the light flash. The microprocessors are not running. - Try disconnecting all terminals except 24VAC to power the Control. The green light should be steady. If it is not, then the control is defective. If steady, start plugging in all the connectors while watching the green light. When faulty wiring reconnected, green light will begin to flash.
Display Completely Dark but Boiler fires	No 5 Vdc Power to Display	- Loose 5 Vdc connection wiring between display and Control - Defective Display or Control.
****00FF** or ****ERFF**	Display lost Communication with Control	- Loose or defective display harness - Defective Display - Defective Control
ER0011	Adjustment Mode Password Timeout	- The Control and Display are **NOT** defective. The password has timed out. Simply cycle power to the Display to restore operation.
ER0012	Control Failed	- Defective Control. Replace Control.

C. Help Screen Faults

Indication	Condition	Possible Cause
Zone Panel Setup Flashing	Zone Panel 1 Setup Flashing	Zone Panel 1 communication lost, typical for Panel 1 through 4: The zone panel's communication was established and then lost. Check the following to correct the issue: • Wiring between panel and boiler. • Zone panel DIP switch settings have changed: - Set Master/Slave switch to "Master" - Set Zone Control switch ZC1 to "ON" - Cycle power
	Zone Panel Failure Flashing	Zone Panel Electronics Failure: A Zone Panel
	Duplicate Zone Flashing	Duplicate Zone: The Control has detected duplicate zone panel numbers. Check the following to correct: • Each Zone Control DIP Switch must be set to a Unique setting: 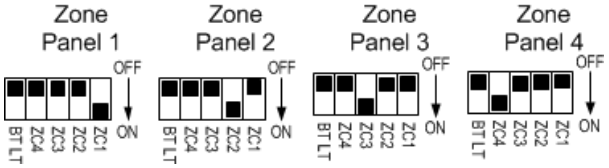 Note that when multiple ZC switches are set on ON the Zone Panel is reported as Zone Panel 1.
Sequencer Setup	Sequencer Setup Fault	This alarm is active if the slave boiler has lost communication with the Sequence Master. Check the following: - RJ 45 peer-to-peer network disconnected - Sequencer Master was Enabled and then Disabled - Master's Boiler has been powered down. - To clear fault restore communication or cycle power
Boiler Size Setup	Boiler Size Fault	**WARNING!** Boiler size setting may not match actual boiler size. The Boiler size setting determines min, max and light-off blower speeds. Incorrect boiler size can cause hazardous burner conditions and improper operation that may result in PROPERTY LOSS, PHYSICAL INJURY, OR DEATH. Refer to page 119 for boiler size setting instructions.

D. Help Screen Diagnostic Features

Indication	Possible Cause
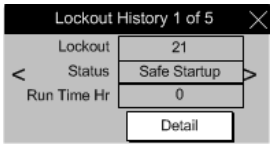	Lockout History is stored in a first-in, first-out basis. Each History file is stored with boiler run hour of when the lockout occurred. The "When happened" and "Current" provide: - "Current" is the run hour and status the boiler just finished. - "When happened" is the run hour and status when the lockout occurred.
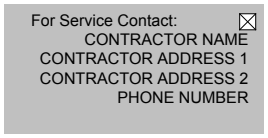	The user is given the contact information of the responsible service provider. Refer to page 127 for data entry instructions.

E. Active Fault Screen Faults

Indication	Condition	Possible Cause
Limit String Status 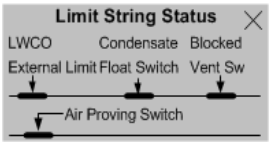	Limit String Fault	The Limit String Status screen shows the safety limit status. A contact icon, either "open" or "closed", graphically represents each safety limit. The "closed" contact icon is steady; the "open" contact icon is blinking. For example, the screen shown to the left illustrates a "closed" external limit contact and an "open' LWCO contact. NOTE: Since the limit string items are wired in series, all limits downstream of the "open" limit will also appear on the screen as "open" (blinking) icons regardless of whether or not they are actually open. The Air Proving Switch is wired independent to all other limits. The Air Proving Switch is only required to be closed during boiler pre-purge. It is normal for it to be open during run mode.
Sensor Status 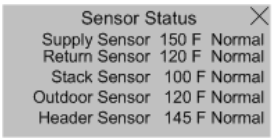	Sensor Fault	The Sensor Status screen shows the status of all sensors. Possible states include: None: Feature requiring this sensor has not been selected. Normal: Sensor is working normally. Shorted: Sensor is shorted or is defective. Open: There is a break in the wiring between the Control and the sensor or the sensor is defective Out of Range: Sensor is defective or is being subjected to electrical noise. Unreliable: Sensor is defective or is being subjected to electrical noise. When a sensor fails "opened" or "shorted" the value is changed to reverse video (background black and value white) "024" or "768" respectively to indicate that there is a fault with the sensor.
Rate Limit 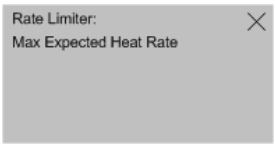	Rate Limit	The following messages appear when the firing rate is limited or reduced to help avoid a lockout or save energy. Refer to Hard Lockout section for corrective actions - High Stack Temperature Limit - High Supply Temperature Limit - High Differential Temperature Limit The following messages appear as part of normal start and stop sequences: - Minimum Modulation (normal start/stop sequence) - Low Fire Hold Rate: Low fire hold rate is a normal start-up rate hold used to help ensure system temperature feedback prior to release to modulation. Low Fire Hold Time may be adjusted. Refer to the "Changing Adjustable Parameters", Paragraph F, for additional information. - Maximum Expected Heat Rate: Maximum Expected Heat Rate limit is a normal start-up rate hold used to save energy. This limit helps reduce extra cycles and save energy. Boiler is free to modulate up to the sum of the active zones and domestic hot water expected heat rates. Each zone heat rate is adjustable and may be modified under the modulation menu. Refer to the "Changing Adjustable Parameters", Paragraph F, for additional information.
EMS Status 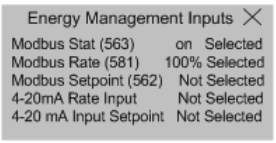	Energy Management System Fault	The Energy Management System (EMS) fault screen provides input fault status. When an input is shown as "Not Selected" it is not required for this application or has not yet been selected. These options are selected under the "Energy Management" Adjust mode menu. Modbus Input Failure — If a modus input is selected and out of range or not present a "535" value is shown reverse video (background black and value white). To fix the problem check the input source and check that the input is properly connected. 4-20mA Input Failure — Failure status for the 4-20mA input is the same as shown under Sensor Fault.

F. Troubleshooting problems where a Soft Lockout Code is displayed. When a soft lockout occurs, the boiler will shut down, the display will turn red and the "Help" button will "blink". Select the "blinking" "Help" button to determine the cause of the soft lockout. The boiler will automatically restart once the condition that caused the lockout is corrected.

Soft Lockout Codes Displayed

Lockout Number	Condition	Possible Cause
2 Boiler Safety Limit Open	Boiler Safety Limit wired to terminals J6-1 or 3 OPEN: • External Limit. • Optional LWCO • Condensate Float Switch	External Limit: • Water temperature is higher than External Limit setting. See "Hard Lockout 4" for additional information. • External device not used and jumper not installed. • External Limit device is defective. • Loose wiring to limit device Optional Low Water Cut Off (LWCO) • If yellow light on LWCO is on, system is low on water. Ensure air vent is unobstructed and properly functioning as a blocked air vent can result in low water indication. • If neither yellow or green light on LWCO is on, check LWCO harness. Condensate Float Switch • Float Switch not installed • Condensate trap is blocked • Float Switch is defective • Loose wiring to float switch
3 Boiler Safety Limit Open	Blocked Vent Switch wired to terminals J5-1 OPEN	• Blocked Vent Switch contact open - check for blocked flue/air intake. NOTE Blocked Vent Switch Special Note Before a call for heat the air pressure switch is closed. When there is a call for heat with a blocked vent the air pressure switch will open (due to excessive pressure of the blower against a blocked flue pipe) after the blower starts. The control stops the start sequence and stops the blower. After the blower stops the pressure switch re-closes and the cycle continues. The displays shows the cause of trip for only the time the pressure switch is open.
7 Return sensor (10 KOhms) fault	Shorted or open return temperature sensor.	• Shorted or mis-wired return sensor wiring. • Defective return sensor.
8 Supply sensor (10 KOhms) fault	Shorted or open supply temperature sensor.	• Shorted or mis-wired supply sensor wiring. • Defective supply sensor.
10 Stack sensor (10 KOhms) fault	Shorted or open flue gas (stack) temperature sensor.	• Shorted or mis-wired flue temperature sensor wiring. • Defective flue temperature sensor.
11 Ignition failure	Flame failure after 5 tries to restart. Flame rod not detecting flame.	• No gas pressure. • Gas pressure under minimum value shown on rating plate. • Gas line not completely purged of air. • Defective Electrode. • Loose burner ground connection. • Defective Ignition Cable. • Defective gas valve (check for 24 Vac at harness during trial for ignition before replacing valve). • Air-fuel mixture out of adjustment - consult factory. • Defective or fouled electrode. • Blocked Vent

Soft Lockout Codes Displayed (continued)

Lockout Number	Condition	Possible Cause
13 Flame rod shorted to ground	• Flame rod shorted to ground	• Shorted or mis-wired flame rod wiring. • Defective flame rod.
14 Differential Temperature inlet/ outlet high	Temperature rise between supply and return is too high.	• Inadequate boiler water flow. Verify that circulator is operating and that circulator and piping are sized per Water Piping and Trim Section of this manual.
15 Return temp higher than supply	The Control is reading a return sensor temperature higher than the supply sensor temperature. Condition must be present for at least 75 seconds for this error code to appear.	• Flow through boiler reversed. Verify correct piping and circulator orientation. • No boiler water flow. Verify that system is purged of air and that appropriate valves are open. • Sensor wiring reversed. • Supply or return sensor defective.
16 Supply temp has risen too quickly	Supply water temperature has risen too quickly.	• See possible causes for “Hard Lockout 4”. • Inadequate boiler water flow. • Verify that circulator is operating and that circulator and piping are sized per Water Piping and Trim Section of this manual.
17 Normal waiting for blower speed to match purge and light-off setpoint.	Normal waiting for blower speed to match purge and light-off setpoint.	
27 Undefined Fault	Undefined Fault	• Consult Factory.
28 or 53 Air Proving Switch Failed to Close	Air Proving Switch Failed to Close	The air proving switch has failed to close; • Check switch, check switch connection and wiring. • Blocked vent, blocked inlet, blocked or disconnected air switch tube, blocked heat exchanger or burner. • Something is blocking air/flue gas flow through boiler
54 Air Proving Switch Failed to Open	Air Proving Switch Failed to Open	The air proving switch has failed closed, check switch is operating properly. The air proving switch is “Closed” when it should be “Open”. The air proving switch is checked for proper function before the blower is started and the start sequence is allowed to continue. If the air switch is closed before the blower is started (when there is no air flow) first a soft lockout is initiated and then a manual reset hard lockout results. The possible cause of the air proving switch to be closed or fail to open is as follows: • The air proving switch is jumpered. • The air proving switch is defective. • The blower is running before the start sequence starts the blower. This can be caused by a loss of communication between the blower and Control. The blower goes to high speed when there is no communication between the Control and the blower. Possible cause of loss of communication is a defective wiring harness, blower or Control.

G. Troubleshooting problems where a Hard Lockout Code is displayed. When a hard lockout occurs, the boiler will shut down, the display will turn red and the "Help" button will "blink". Select the "blinking" "Help" button to determine the cause of the Hard Lockout. Once the condition that caused the lockout is corrected, the boiler will need to be manually reset using the Reset button on the "Active Fault" display or located on the Control.

Alarm Output Contact

The Control includes an alarm output contact located on the low voltage terminal board. The alarm contact closes when the Control goes into a manual reset Hard Lockout. The list of Hard Lockouts is shown below.

Hard Lockout Codes Displayed

Lockout Number	Condition	Possible Cause
4 Supply High Limit	Control supply sensor detected temperatures in excess of 210°F.	• Heating load at time of error was far below the minimum firing rate of the boiler. • Defective system circulator or no flow in primary loop. • Defective boiler circulator, no flow or insufficient flow in boiler loop. • Control system miswired so that the boiler operation is permitted when no zones are calling.
6 Stack High Limit	Control Flue gas (Stack) sensor detected temperatures in excess of 214°F (101°C).	• Heat exchanger needs to be cleaned. • Boiler over-fired. • Air-fuel mixture out of adjustment - consult factory.
12 Flame detected out of sequence	A flame signal was present when there should be no flame.	• Defective gas valve - make sure inlet pressure is below maximum on rating plate before replacing valve.
18 Light off rate proving failed	Blower is not running at Light-off rate when it should or blower speed signal not being detected by Control.	• Loose connection in 120 VAC blower wiring. • Loose or miswired blower speed harness. • Defective blower
19 Purge rate proving failed	Blower is not running at Purge rate when it should or blower speed signal not being detected by Control.	• Loose connection in 120 VAC blower wiring. • Loose or miswired blower speed harness. • Defective blower
20 Invalid Safety Parameters	Unacceptable Control Safety related parameter detected.	Safety Parameter verification required. Contact factory.
21 Invalid Modulation Parameter	Unacceptable Control Modulation related parameter detected.	Reset the control.
22 Safety data verification needed	Safety related parameter change has been detected and a verification has not been completed.	Safety related Control parameter has been changed and verification has not been performed.
23 24VAC Voltage low/high	Control 24Vac control power is high or low.	• Loose connection in 24Vac VAC power wiring. • Loose or miswired 24Vac harness. • Miswired wiring harness causing power supply short to ground. • Defective transformer. • Transformer frequency, voltage and VA do not meet specifications.
24 Fuel Valve Error	Power detected at fuel valve output when fuel valve should be off.	• Reset the control. If problem reoccurs, replace the Control.
25 Hardware Fault	Internal control failure.	• Reset the control. If problem reoccurs, replace the Control.
26 Internal Fault	Internal control failure.	• Reset the control. If problem reoccurs, replace the Control.
27 Undefined Fault	Undefined Fault	• Reset the Control. If problem reoccurs, replace the Control.
54 Air Proving Switch Failed to Open	Air Proving Switch Failed to Open	See Soft Lockout 54.

XV. Service Parts

The following parts may be obtained from any Velocity Boiler Works distributor. To find the closest Velocity Boiler Works distributor, consult the area Velocity Boiler Works representative or the factory at:

Velocity Boiler Works

Customer Service

P.O. Box 14818

Philadelphia, PA 19134

www.velocityboilerworks.com

Space Heating Models Heat Exchanger and Piping Service Parts						
Key No.	Description	Part Number (Qty)				
		RPTR085HB	RPTR110HB	RPTR155HB	RPTR205HB	RPTR270HB
1A	Heat Exchanger	Contact U.S. Boiler Company. Provide boiler serial number.				
1B	Burner (includes burner and screws)	108035-01	108035-02	108035-03	108035-04	108035-05
1C	Burner Plate Insulation	108036-01		108036-02	108036-03	
1D	Flame Sensor (includes electrode, gasket, and hardware)	105798-01				
1E	Ignitor (includes electrode, gasket, and hardware)	103005-02				
1F	Flue Gasket (Heat Exchanger or Flue Pipe)	107000-01			107000-02	
1G	Silicone Tubing	106989-01				
1H	Blocked Vent Switch	105857-01		106988-02	105857-01	106988-02
1I	Condensate Float Switch	108048-01				
1J	Condensate Trap	108049-01				
1K	Return Sensor	106991-01				
1L	Flue Sensor	107932-01				
1M	Supply Sensor	106994-01				
1N	30 psi Releif Valve	81660319				
1O	Temperature & Pressure Gauge	105894-01				
1P	Water Grommet (includes 2 grommets)	107257-01			107258-01	
1Q	Water Gasket (includes 2 gaskets)	106995-01			106996-01	
1R	Supply Pipe Assembly (includes pipe assembly, gasket, & jacket grommets)	106977-01			106977-02	
1S	Return Pipe Assembly (includes pipe assembly, gasket, & jacket grommets)	106997-01			106997-02	

Space Heating Models:

- **RPTR085HB**
- **RPTR110HB**
- **RPTR155HB**
- **RPTR205HB**
- **RPTR270HB**

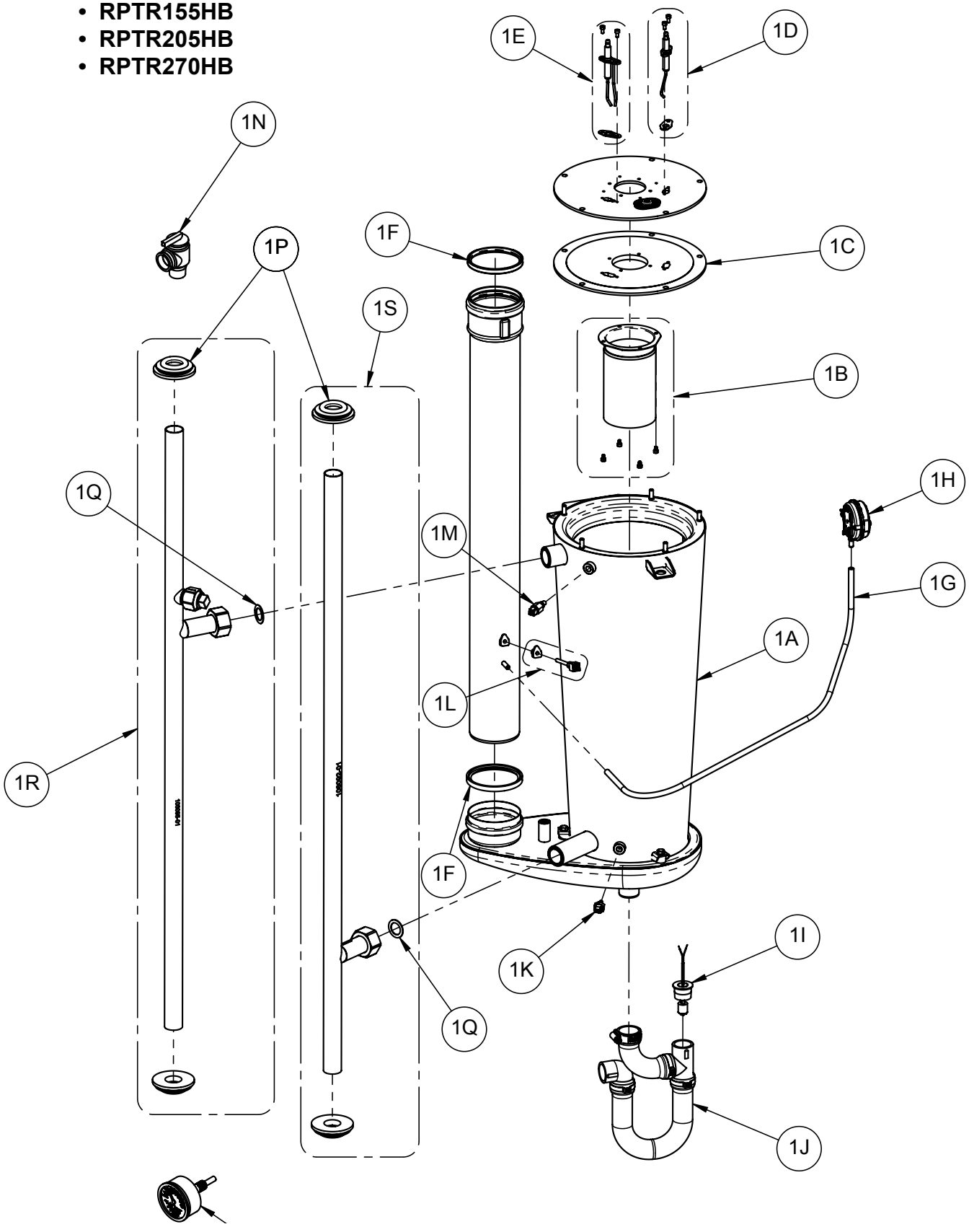

Size 155 MBH Combi Heat Exchanger and Piping Service Parts		
Key No.	Description	Part Number (Qty)
		RPTR155CB
2A	Heat Exchanger	Contact U.S. Boiler Company. Provide boiler serial number.
2B	Burner (includes burner and screws)	108035-03
2C	Burner Plate Insulation	108036-02
2D	Flame Sensor (includes electrode, gasket, and hardware)	105798-01
2E	Ignitor (includes electrode, gasket, and hardware)	103005-02
2F	Flue Gasket (Heat Exchanger or Flue Pipe)	107000-01
2G	Silicone Tubing	106989-01
2H	Blocked Vent Switch	106988-02
2I	Condensate Float Switch	108048-01
2J	Condensate Trap	108049-01
2K	Return Sensor	106991-01
2L	Flue Sensor	107932-01
2M	Supply Sensor	106994-01
2N	30 psi Relief Valve	81660319
2O	Temperature & Pressure Gauge	105894-01
2P	Water Grommet (includes 2 grommets)	107257-01
2Q	Water Gasket (includes 2 gaskets)	106995-01
2R	Supply Pipe (includes pipe assembly, zone valve body, gasket, & jacket grommet)	106977-03
2S	Return Pipe Assembly (includes pipe assembly, gasket, & jacket grommet)	106978-01
2T	Zone Valve Actuator	108041-01
2U	Circulator to Flat Plate Pipe Assembly (includes gasket)	106979-01
2V	Water Gasket (top flat plate heat exchanger connections, includes 2 gaskets)	106996-01
2W	DHW Circulator, Taco 007e	Obtain Locally
2X	Flat Plate Heat Exchanger (includes heat exchanger, water gaskets, and jacket gasket)	106984-01
2Y	External Combi Piping	108040-01
2Z	External Combi Piping Gasket	106488-01
2AA	Thermostatic Mixing Valve	108042-01
2BB	Flow Switch	107215-01

Combi Domestic Hot Water and Space Heating Model:

- **RPTR155CB**

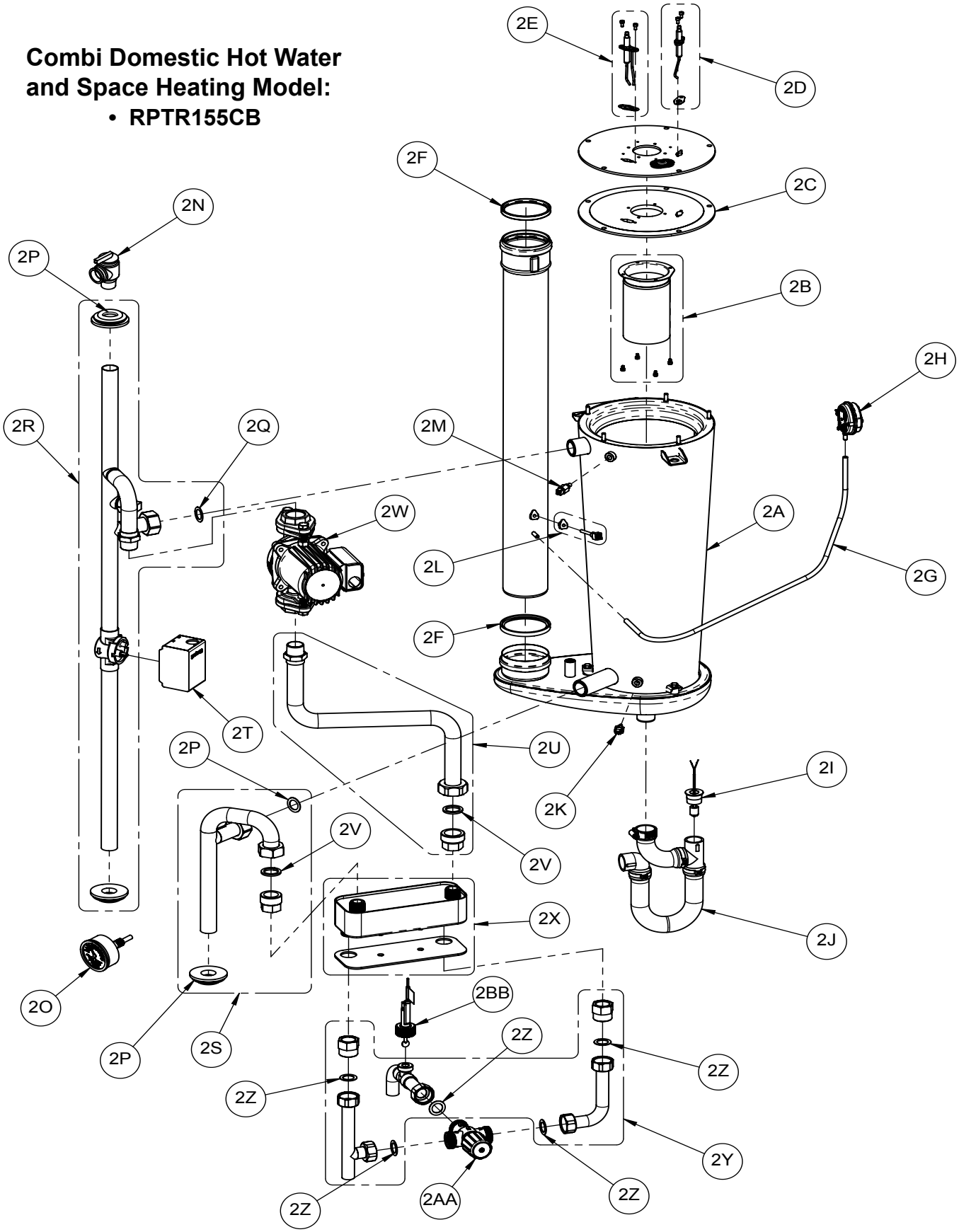

All Models MBH Blower and Gas Train Service Parts						
Key No.	**Description**	**Part Number (Qty)**				
		RPTR085HB	**RPTR110HB**	**RPTR155HB & RPTR155CB**	**RPTR205HB**	**RPTR270HB**
3A	Natural Gas (NG) Combustion Assembly (includes Blower, NG Venturi Assembly, Gas Valve, and Hardware)	107944-01	107945-01	107946-01	107947-01	107948-01
	LP (Propane) Combustion Assembly (includes Blower, LP Venturi Assembly, Gas Valve, and Hardware)	107939-01	107940-01	107941-01	107942-01	107943-01
Not Shown	LP (Propane) Conversion Kit	107934-01	107935-01	107936-01	107937-01	107938-01
3B	Blower Outlet Gasket	106029-01				
3C	Gas Valve Flange	107901-01				108103-01
3D	Flare Fitting	107247-01				108102-01
3E	Gas Valve Rectifier Module	105829-01				105830-01
3F	Gas Line Flex Tube	107009-01				107009-02
3G	Gas Shutoff Valve	107010-01				
3H	22 Inch Gs Pipe W/ Flange	108050-01				
3I	Silicone Tubing	106989-01				
3J	Air Proving Switch	107933-01	105849-01		107933-01	
3K	Polypropylene Inlet Attenuator	108051-01				

All Models

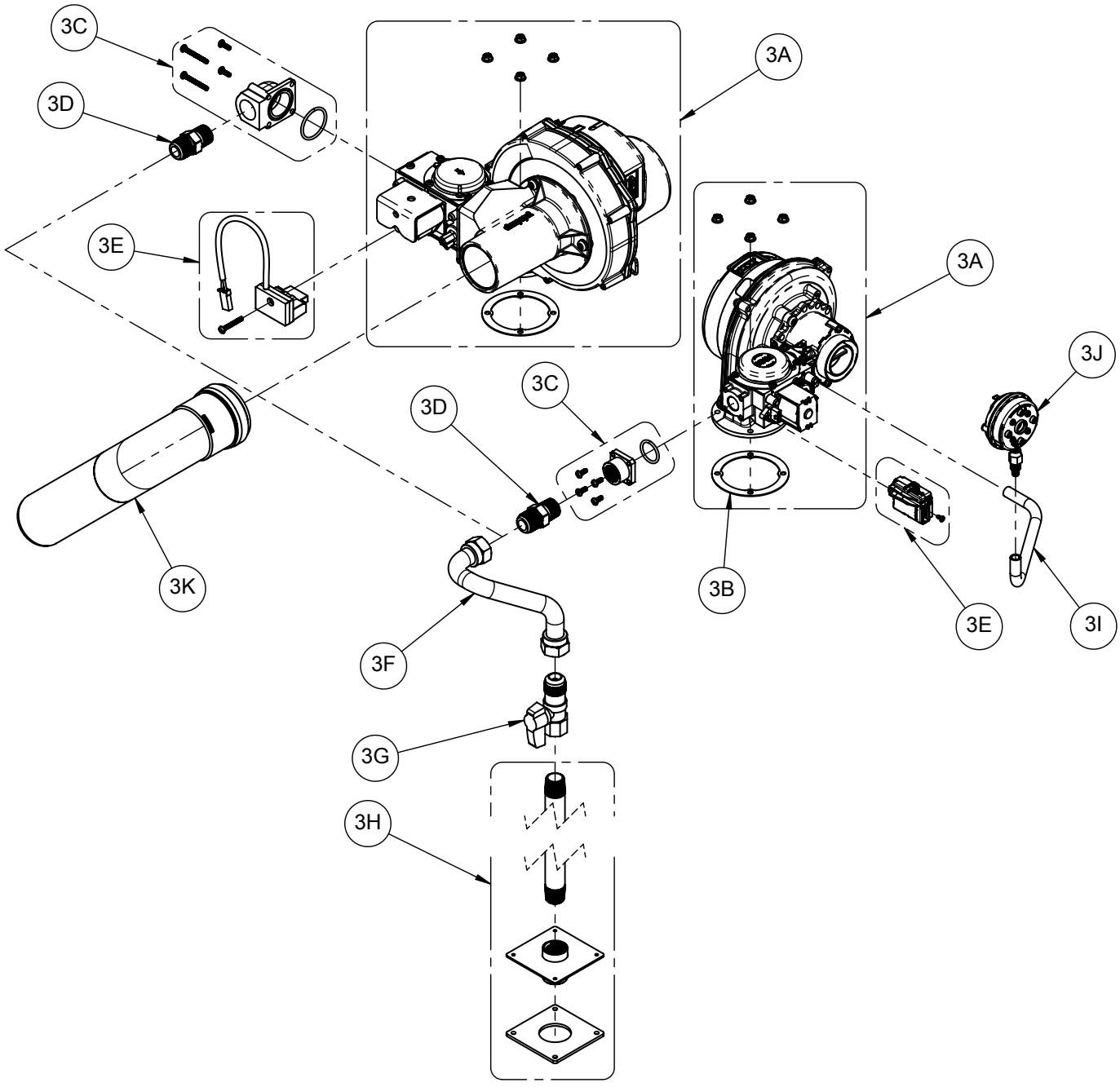

All Models Jacket Service Parts							
Key No.	Description	Part Number (Qty)					
		RPTR085HB	RPTR110HB	RPTR155HB	RPTR155CB	RPTR205HB	RPTR270HB
4A	Front Door Assembly (includes door, plastic trim and hardware)	107016-02					
4B	Door Latch (includes 2 Catch and Keeper)	107199-01					
4C	Gas Train Support Bracket (includes hardware)	108038-01			108038-02	108038-01	
4D	Vent Connector (includes connector, gaskets, and hardware)	107034-01					
4E	Air Intake Connector (includes connector, gasket, and lockout)	107017-01					
4F	Jacket Panel (includes Painted Control Panel Frame, Unpainted Control Panel, Right Side Panel, 9"x9" Access, and hardware)	108034-01			108034-02	108034-03	
4G	Wall Hanging Bracket and Bottom Securing Bracket	102989-01					
Not Shown	High Voltage and Low Voltage Fuse Kit	105856-01					

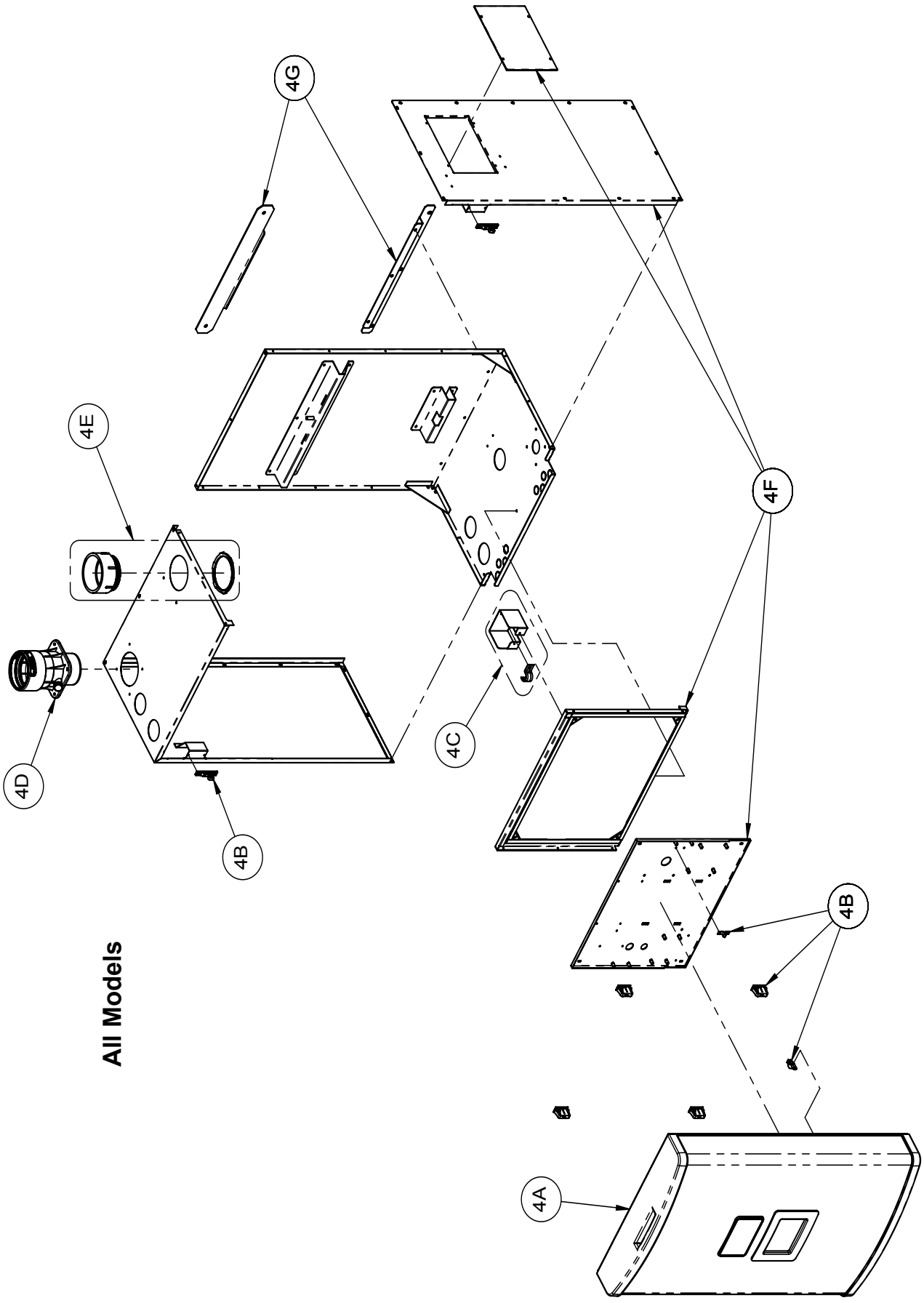

All Models

All Models Control Panel Service Parts						
Key No.	Description	Part Number (Qty)				
		RPTR085HB	RPTR110HB	RPTR155HB & RPTR155CB	RPTR205HB	RPTR270HB
5A	Transformer	106034-01				
5B	High Voltage PCB (includes PCB, fuses, cover, and screws)	107020-01				
5C	Programmed Control	107863-01				107863-02
5D	Square Control Panel Gaskets	108052-01				
5E	Low Voltage PCB (includes PCB, fuses, and screws)	107035-01				
5F	User Interface Inner Plastic Trim	108053-01				
5G	Programmed Display	107865-01				

All models

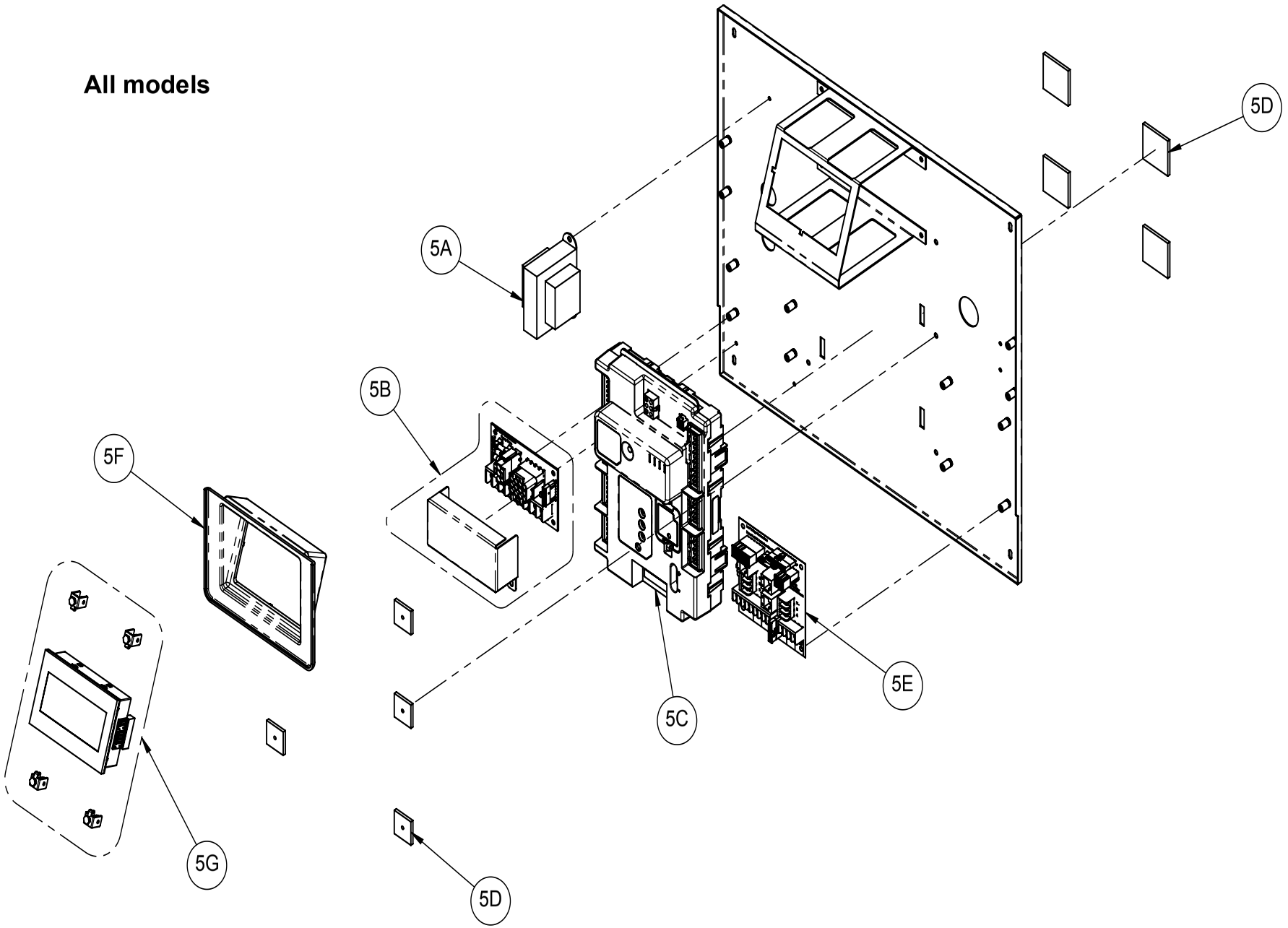

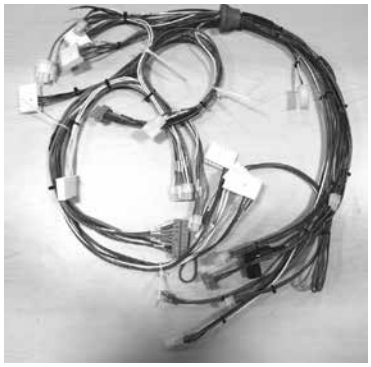

6A

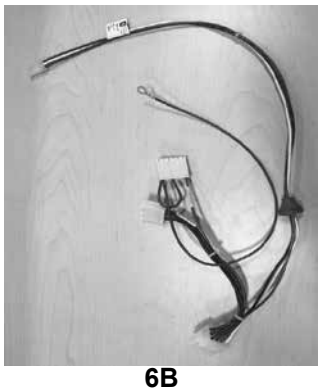

6B

6C

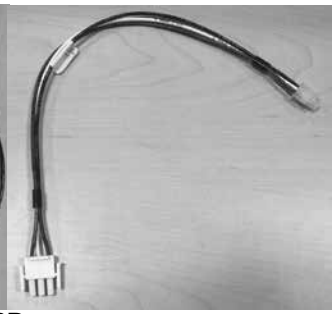

6D

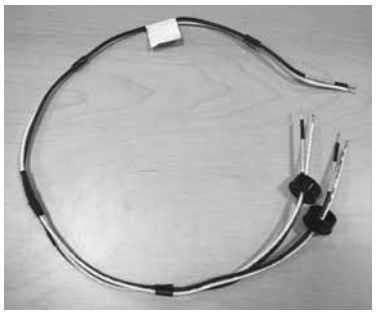

6E

All Models Wire Harness Service Parts						
Key No.	Description	Part Number (Qty)				
		RPTR085HB	RPTR110HB	RPTR155HB & RPTR155CB	RPTR205HB	RPTR270HB
6A	Low Voltage / Communication Harness	108039-01				108039-02
6B	High Voltage Harness	107037-01				
6C	Ignition Cable Harness	107211-01				
6D	Blower Control (4 pin) and Blower Power (3 pin) Harness	108044-01				
6E	DHW to Circulator and Zone Valve Harness	107004-01				
Not Shown	LWCO Jumper	105908-01				
Not Shown	Outdoor Temperature Sensor	102946-01				
Not Shown	Header Sensor	103104-01				

Appendix A: Instructions for High Altitude Installations Above 2,000 ft.

These instructions apply only to the following altitude ranges: **2001 - 6000, 6001 - 7800, 7801 - 10,100**
These instructions contain specific information to setup your boiler to ensure proper operation.

⚠ WARNING

LP Conversions - boiler setup from factory is configured for use with natural gas installed from 0 - 2,000 ft. above sea level only. For conversion to LP, use a proper conversion kit per Table 3.1. Use combustion analyzer and follow all instructions supplied with conversion kit. If the instructions are not followed exactly, a fire, an explosion or production of carbon monoxide may result causing property damage, personal injury or loss of life. The qualified service agency is responsible for proper installation of this boiler for use with LP gas. The installation is not proper and complete until he operation of the converted appliance is checked as specified in the manufacturer's instructions supplied.

These instructions include a procedure for adjusting the air-fuel mixture on this boiler. This procedure requires a combustion analyzer to measure the CO_2 (or Oxygen) and Carbon Monoxide (CO) levels in flue gas. Adjusting the air-fuel mixture without a proper combustion analyzer could result in unreliable boiler operation, personal injury, or death due to carbon monoxide poisoning.

Failure to setup the boiler in accordance with these instructions could result in high amount of Carbon Monoxide to be produced which could result in death, serious injury, and/or reduced component life.

Adjusting Boiler Type (must be completed first)

Select the correct boiler size, altitude range, and fuel using the touch screen display as follows:

1. Check boiler's rating label for actual boiler size.
2. Confirm installation altitude
3. Power up the boiler. The display will show the Home screen.
4. Press "Adjust" button on the Home screen.
5. Press "Adjust" button on the Adjust Mode screen.
6. Press "Login" button to access Password screen.
7. Press 5-digit display to open a keypad. **Enter the password "86"** and press the return arrow to close keypad. Press "Save" button.
8. Press "Adjust" button to enter Adjustment Mode.
9. Press "Modulation Setup" menu button.
10. Press "Adjust" button on the Boiler Type screen.
11. Use the ↓ ↑ arrow buttons to select the correct size, altitude and fuel of your boiler. Press the (Check with Circle) button to enter your selection.
12. Press "Enter" button until display stops blinking, press next and repeat until "Completed" is displayed.
13. Press X to exit.

Basic Setup Procedure for High Altitude

- After Boiler Type has been selected, proceed to Section XI "Start-up and Checkout" to complete boiler setup.
- See Table A2 for natural gas altitude combustion values.
- See LP Gas (Propane) Conversion Instructions for LP Gas (Propane) altitude combustion values.

NOTICE

110 LP installation above 2,000 ft, attenuators supplied with conversion kit must be installed per conversion kit instructions.

Appendix A - (continued)

Table A.1: Altitude Adjustments (Above 2,000 ft. only)

Model No.	Fuel	Approximate Derate per 1,000 ft.		
		2,001-6,000 ft	6,001-7,800 ft	7,801-10,1000 ft
RPTR085HB	NG	0.0%	0.3%	1.0%
	LP			0.9%
RPTR110HB	NG		1.0%	1.6%
	LP	0.7%	2.0%	2.5%
RPTR155HB RPTR155CB	NG	2.3%	3.0%	3.4%
	LP	1.2%	1.9%	2.2%
RPTR205HB	NG	2.9%		
	LP			
RPTR270HB	NG	0.0%	1.5%	2.1%
	LP	2.0%	3.0%	3.9%

De-rate's per 1000 ft. are approximate
Based on minimum vent length

Table A.2: Acceptable Combustion Readings (Above 2000 ft. only)

Model No.	Fuel	Measured CO_2 (%)*						Max. CO Air Free
		2,001-6,000 ft		6,001-7,800 ft		7,801-10,100 ft		
		Range	Target	Range	Target	Range	Target	
RPTR085HB	NG	9.7-10.0	10.0	9.7-10.0	10.0	9.5-9.8	9.8	COAF readings must be less than 200 ppm.
RPTR110HB	NG	9.4-9.7	9.7	9.2-9.4	9.4	9.1-9.4	9.4	
RPTR155HB RPTR155CB	NG	9.0-9.3	9.3	8.4-8.7	8.7	8.1-8.4	8.4	
RPTR205HB	NG	8.9-9.2	9.2	8.9-9.2	9.2	8.7-9.0	9.0	
RPTR270HB	NG	9.0-9.2	9.2	8.9-9.1	9.1	8.8-9.0	9.0	

* Low Fire Range and Target values are the same as High Fire above. Ensure low fire CO_2 reading is less than or equal to high fire CO_2 reading.

Table A.2: Acceptable Combustion Readings (Above 2000 ft. only)

Model No.	Fuel	Measured O_2 (%)**						Max. CO Air Free
		2,001-6,000 ft		6,001-7,800 ft		7,801-10,100 ft		
		Range	Target	Range	Target	Range	Target	
RPTR085HB	NG	6.4.-6.2	6.2	6.4-6.2	6.2	6.5-6.3	6.3	COAF readings must be less than 200 ppm.
RPTR110HB	NG	6.5-6.4	6.4	6.6-6.5	6.5	6.7-6.5	6.5	
RPTR155HB RPTR155CB	NG	6.8-6.6	6.6	7.1-6.9	6.9	7.2-7.1	7.1	
RPTR205HB	NG	6.8-6.6	6.6	6.8-6.6	6.6	6.9-6.8	6.8	
RPTR270HB	NG	6.8-6.6	6.6	6.8-6.7	6.7	6.9-6.8	6.8	

** Low Fire Range and Target values are the same as High Fire above. Ensure low fire O_2 reading is greater than or equal to high fire O_2 reading.

Table A.3: Approximate Starting Number of Throttle Turns

Model Size	No. Counter-Clockwise Turns (From Fully Closed)
	NG
85	7.0
110	9.5
155	13.0
205	20.0
270	5.5

Appendix B: RPTR155CB Combi Instruction Manual

I – Product Description

The RPTR155CB provides economical, reliable, tankless domestic hot water (DHW) production in addition to central space heating provided by the RPTR high efficiency boiler.

II – Domestic Hot Water Basic Operation

The RPTR155CB Combi provides central heat through a high efficiency stainless steel heat exchanger and DHW through a flat plate heat exchanger. DHW is activated by a flow switch. Water temperatures are regulated by the boiler controls and a thermostatic mixing valve.

III – Specifications

RPTR155CB Boiler Input Rate: 155MBH

Compatible Boiler Control: B1020 or higher

Thermostatic Mixing Valve:

- ☐ Adjustable 70°F (21°C) — 145°F (63°C).
- ☐ ASSE 1017 Certified

Minimum Flow to Operate: 0.5 gpm (2 ℓ/min)

Lead Content: Components comply with SDWA Section 1417, Jan. 4, 2014 version.

RPTR155CB Performance

- ☐ DHW Output @ 70°F (39°C) T.rise: 4.0 gpm (15.1 ℓ/min)
- ☐ DHW Output @ 77°F (43°C) T.rise: 3.65 gpm (13.8 ℓ/min)

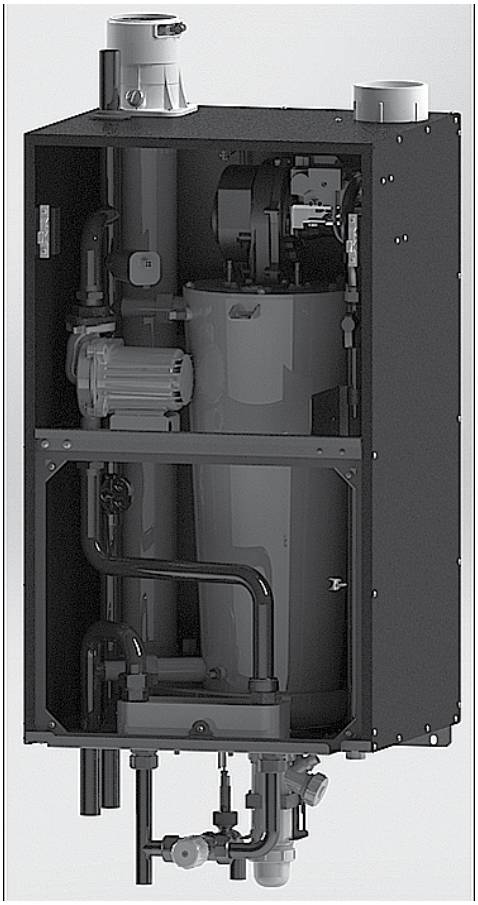

IMPORTANT INFORMATION - READ CAREFULLY

NOTE: The equipment shall be installed in accordance with those installation regulations enforced in the area where the installation is to be made. These regulations shall be carefully followed in all cases. Authorities having jurisdiction shall be consulted before installations are made.

All wiring on boilers installed in the USA shall be made in accordance with the National Electrical Code and/or local regulations.

DANGER

Electrical Shock Hazard. Positively assure all electrical connections are unpowered before attempting installation or service of electrical components or connections of the boiler or building. Lock out all electrical boxes with padlock once power is turned off.

Water temperature above 120°F (49°C) can cause serious injury. Mixing valve temperature setting should be done by a licensed contractor per local code requirements. To ensure correct temperature control, use the water thermometer at faucet outlet.

WARNING

Improper installation, adjustment, alteration, service or maintenance can cause property damage, personal injury or loss of life. Read and understand the entire boiler manual before attempting installation, start-up operation, or service. Installation and service must be performed only by an experienced, skilled, and knowledgeable installer or service agency.

Failure to properly install, adjust, service or pipe this Combi may result in improper operation causing damage to the boiler and structure and personal injury. All work should be done in accordance with current manufacturer instructions and local codes.

NOTICE

Hard water conditions may result in scale deposits in Combi components. Hard water will significantly shorten the life of these parts. Water conditioning is recommended for water hardness greater than 200 ppm.

- ☐ **Domestic Hot Water output capacity in gpm changes with varying domestic inlet water temperatures.**
- ☐ **Domestic Hot Water components must comply with SDWA Section 1417, Jan. 4, 2014 version.**

Do not use ethylene glycol or chemicals that are not explicitly permitted by the boiler installation instructions. See the "Start-Up and Checkout" section of these instructions for important information on water chemistry requirements.

DANGER
Explosion/Scald Hazard

Pipe relief valve discharge to a location where the potential of severe burns is eliminated.

Do not install relief valve having a setting greater than the MAWP shown on the rating plate.

Do not install a valve in the relief valve discharge line.

Do not install relief valve in a location other than that specified by the factory.

Do not plug the relief valve discharge.

Do not install a valve between boiler and boiler relief valve.

IV – Introduction

1. Parts Included: 3 copper pipe assemblies, thermostatic mixing valve, flow switch, and miscellaneous parts bag.
2. Install boiler per installation instructions. Attach supply and return piping at bottom of jacket (See Figure C.1).
3. Install 30psi relief and air vent at top of boiler shown in Figure C.2. Please note there is no top and bottom supply/return connection available on combi 155 boiler, only bottom supply and return piping.
4. Install DHW piping included in miscellaneous parts carton. See pages 172 for DHW pipe assembly. Correctly pipe domestic side in/out connections using check valve, relief valve, and expansion tank as described in Figure C.2.
5. Complete wiring and system connections. See page 173.
6. Adjust mixing valve. See page 174.

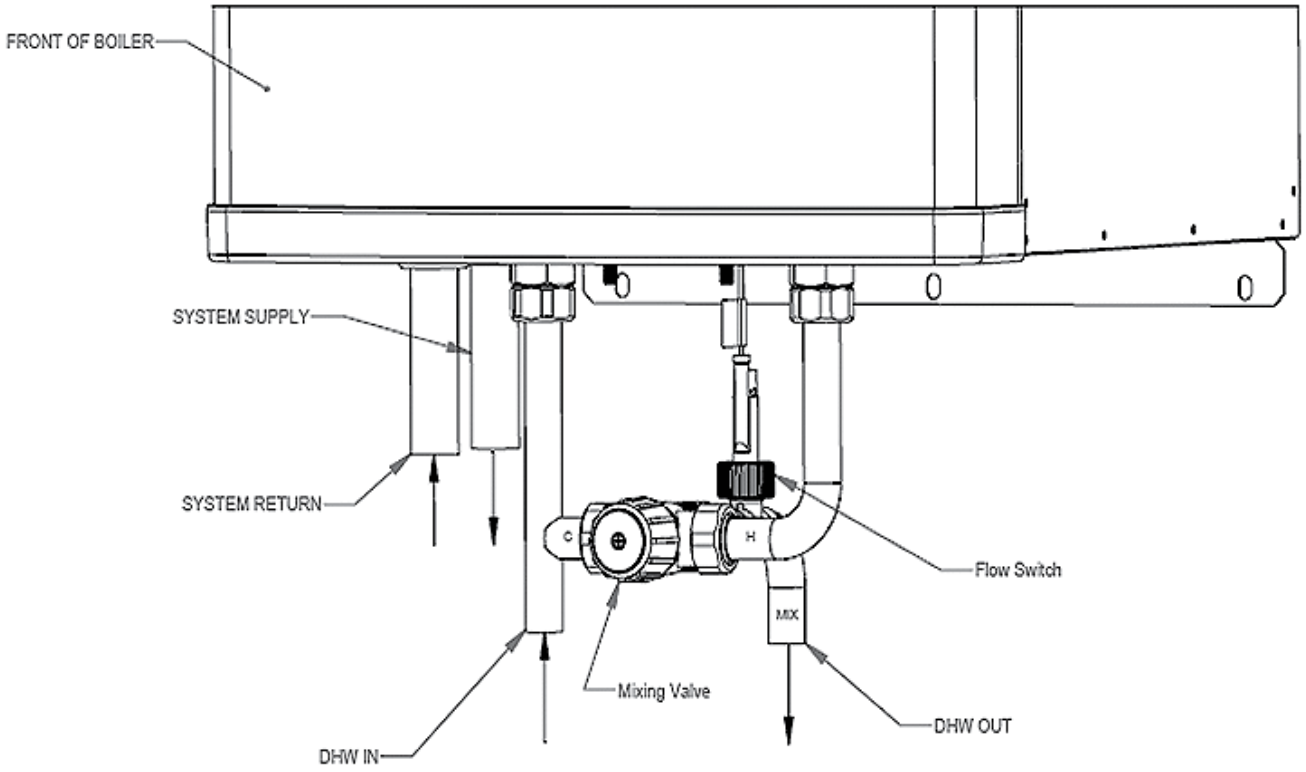

Figure C.1: Combi Piping Assembly Outside of Jacket

V– Piping Diagram

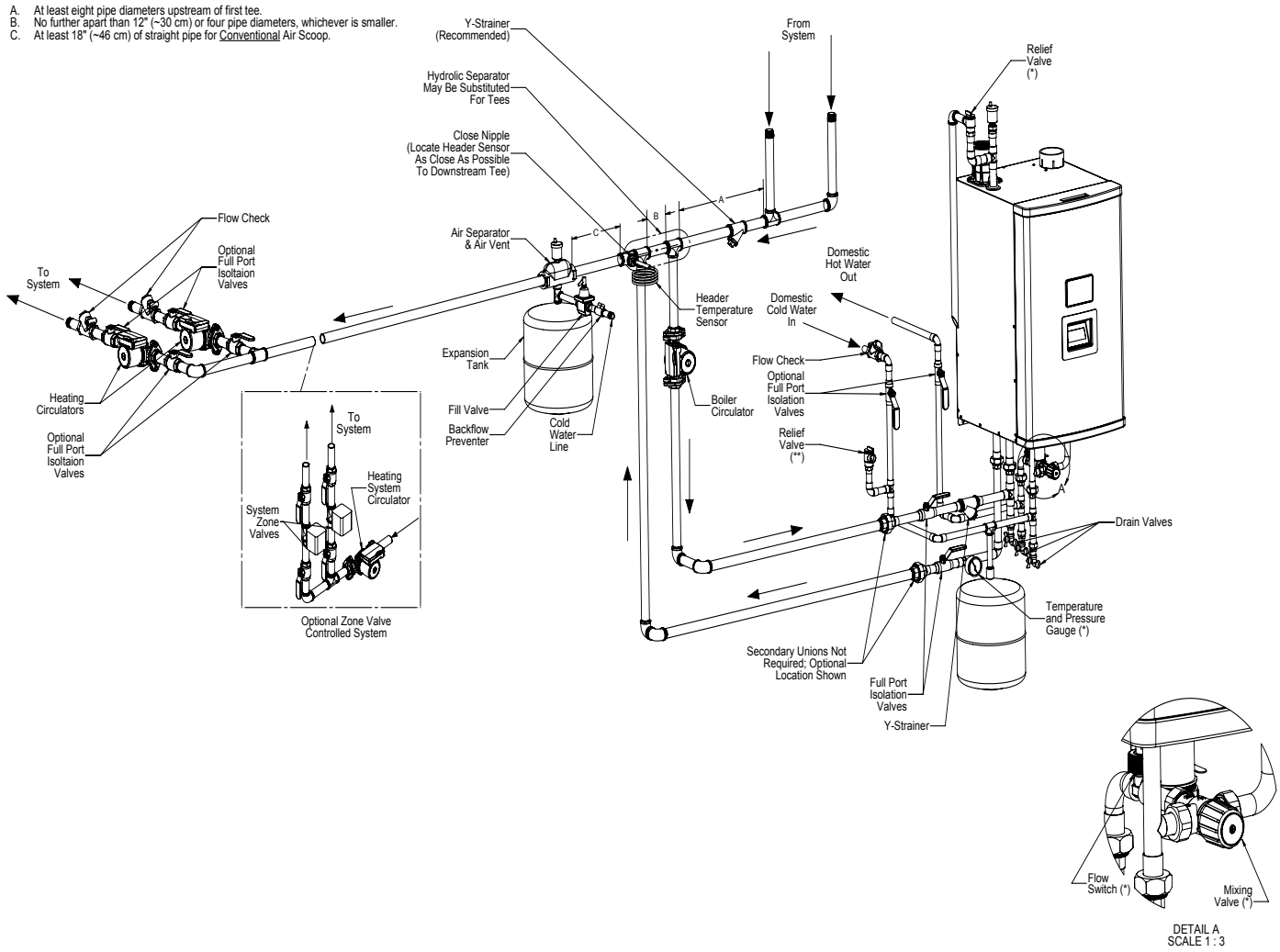

Figure C.2: Domestic and Space Heating Piping Diagram for RPTR155CB

Notes:

- Refer to preceding sections of this manual for additional piping and water quality requirements.
- Relief valve (supplied by installer) in DHW piping marked (**) is to be installed as required by local codes.
- Provide supports for relief valve and system piping to minimize load placed on the Combi piping connections.
- Components marked (*) are supplied with the boiler. All other components are supplied by installer.

NOTICE

Do not install check valve(s) or pump with an integrated check valve in boiler loop piping. Use of check valve(s) may isolate boiler from expansion tank when zone valve closes during a call for DHW.

CAUTION

Application of excessive heat during sweating to repair piping could damage union gaskets or brazed joints on Combi piping.

It is the installers responsibility to select piping configurations that will provide the proper flow rates through the system.

Tools Needed:

- 1/2 inch open-end wrench
- Flat Head screwdriver
- Phillips head screwdriver, Standard and small
- Small flat-head screwdriver
- Pliers
- Adjustable wrench
- Electric drill with extension

VI – General Installation Instructions

☐ **All connections in this kit require gaskets (included) and thread sealant (installer supplied).**

☐ Pipe assemblies are packed with hand-tight, pre-assembled unions. Remove these unions before re-attaching them with gaskets at final connections.

VII - Preparation

☐ Connections to gas, electrical power and building heating system water piping should be completed using the instructions and warnings in preceding sections of this manual.

1. Review all local codes to assure installation compliance.
2. Confirm that all electrical, water and gas supplies are shut off at sources.
3. Unpack and identify all parts. Retain all instructions.

IX – DHW Section (on bench)

1. Unpack mixing valve, flow switch and three pipe assemblies.
2. Identify the hot water inlet "H", cold water inlet "C" and mixed water outlet "MIX" of the mixing valve (1)*. Orient the "H" connection on your right hand side with the "MIX" connection pointing away from you.

See Figure C.3 for assembly

3. Hand-tighten the hot water inlet pipe (2)* along with a gasket to the connection marked "H" on the mixing valve.
4. Hand-tighten the cold water inlet pipe (3)* along with a gasket to the connection marked "C" on the mixing valve.
5. Tighten the mixed outlet pipe (4)* along with a gasket to the connection marked "C" on the mixing valve.
6. Tighten the flow switch (5)* so that the arrow points away from the mixing valve. Ensure the flow switch is installed in the vertical position.

*Numbers is parenthesis refer to balloon numbers in Figure C.3

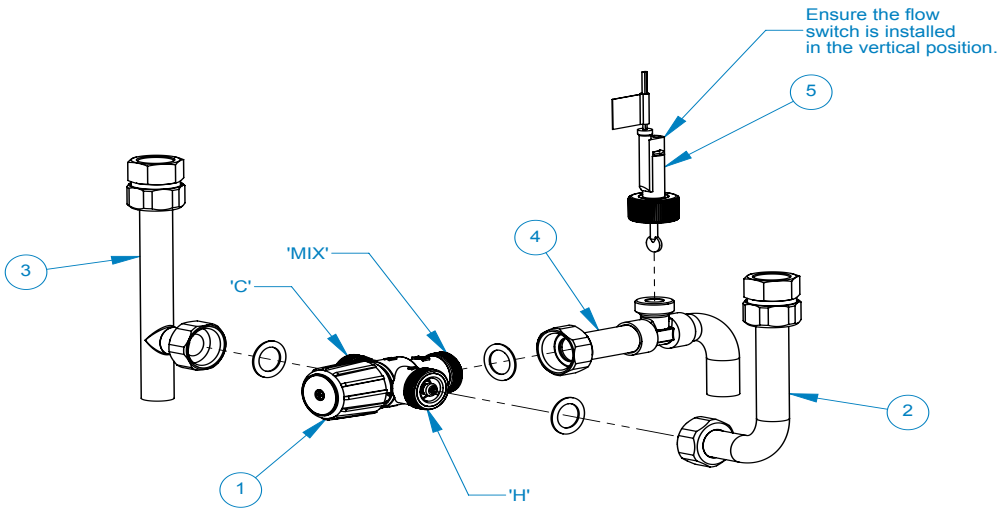

Figure C.3: DHW Assembly Diagram

WARNING

Technicians must install, a boiler safety relief valve (SRV) per the preceding sections of this manual. These Combi instructions offer an alternate SRV location. SRV components are supplied with the boiler.

NOTICE

Proper installation of the flow switch is required for the boiler to fire and produce domestic hot water.

X - DHW Section (at boiler)

1. Remove two 3/4" unions from DHW pipe section and add thread sealant. Attach and tighten them to flat plate heat exchanger at bottom of jacket.
2. Square up installation and tighten all unions. Ensure gaskets are properly installed.
3. Install remaining domestic piping per Figure C.2 ensuring that check valve, relief valve, and expansion tank are installed on domestic side per local codes.

XI – Electrical

WARNING

Turn off all power before proceeding.

10. Remove door from boiler. Identify low voltage PCB on right side of compartment.
11. Remove a knockout near “DHW T’Stat” connection. Install a knockout strain relief.
12. Thread two wire leads from flow switch through strain relief and connect them to either of the two “DHW T’Stat” terminals. See wiring schematic in “Wiring Section” of this manual.

CAUTION

Safety relief valve, expansion tank and flow check valves for DHW are not supplied with this Combi. Consult local codes to determine if required.

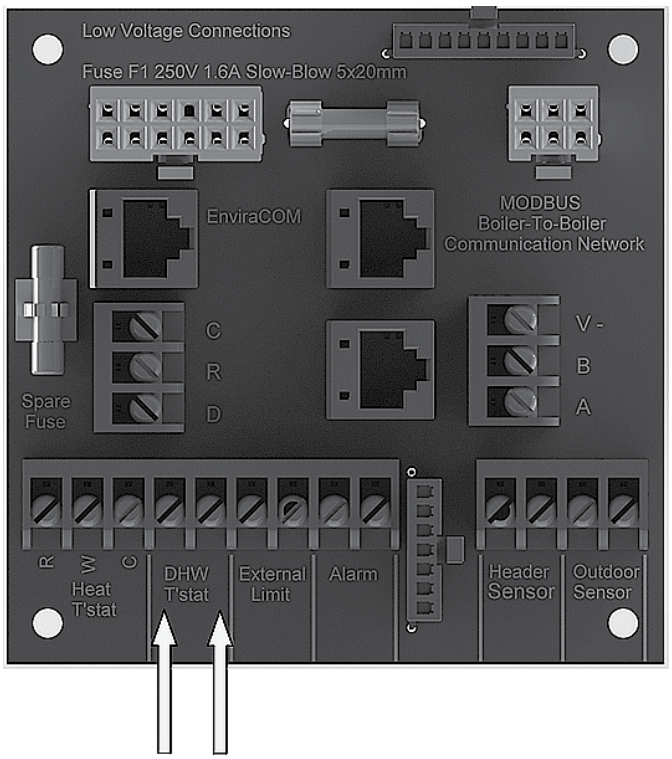

XII– System Readiness (Consult preceding sections in this manual for boiler connections)

13. Fill system. Bleed air from main heat exchanger through top, left manual air vent. Bleed air from both CH and DHW loops.
14. Connect gas line and condensate line per preceding sections in this manual.
15. Connect near boiler heating system water lines per diagram Figure C.2. Follow general piping instructions in the “System Piping” Section of this manual.
16. Installing isolation valves and drain valves on DHW inlet and outlet is recommended to permit flat plate heat exchanger to be flushed periodically.
17. Connect to incoming domestic cold water and building domestic hot water systems. Refer to Figure C.2.

WARNING

To complete service and place boiler back into operation, follow "Start-up and Checkout" Section in this manual.

XIII – Boiler Control Set-up

18. Turn on boiler power
19. From boiler home screen, select "Adjust" and login.
20. Select "Domestic Hot Water" menu.
21. Priority time may be adjusted between 30 and 60 minutes.

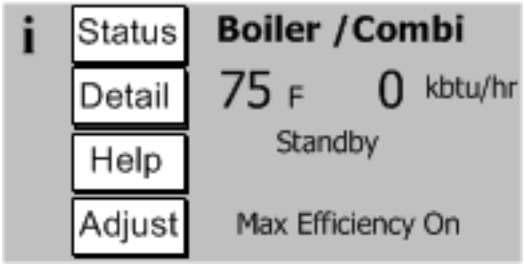

DANGER

- **Water temperature over 125°F (52°C) can cause severe burns instantly or death from scalds.**
- **Children, disabled and elderly are at highest risk of being scalded.**
- **Feel water before bathing or showering**
- **Installation of an ASSE 1017 or ASSE 1070 certified tempering valve is REQUIRED as part of this boiler's installation. Consult manual for details on valve installation and temperature adjustment.**

XIV – Mixing Valve Set-up

23. Set and operate mixing valve per manufacturer instructions. If instructions are lost, download a new copy from manufacturer's website (customer.honeywell.com) before proceeding.
24. Measure water temperature using a thermometer or the thermostrip provided with mixing valve.
25. Loosen hand-wheel screw, lift hand-wheel and turn to the desired temperature as indicated on thermostrip.
26. Re-position hand-wheel and re-tighten screw.

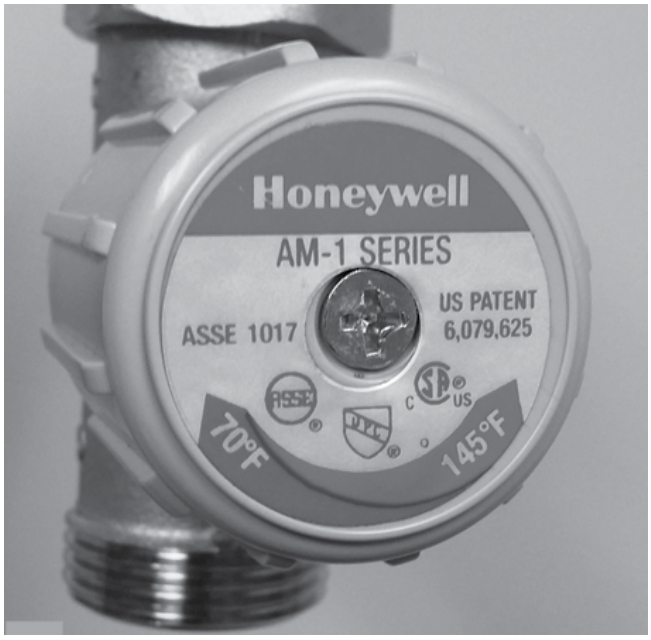

XV – Troubleshooting

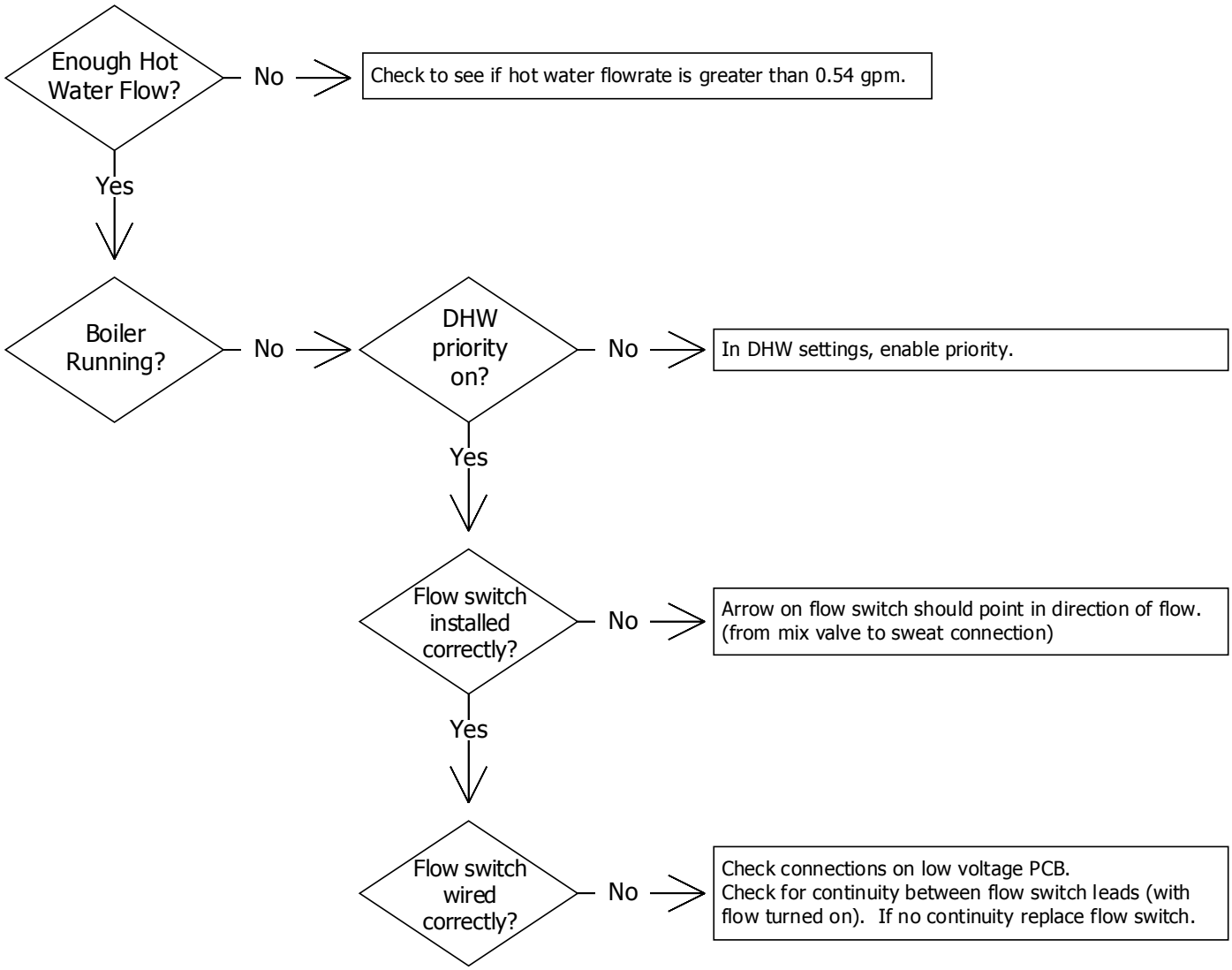

XVI – Service, Maintenance and Inspection

- Monthly – Inspect all water and gas lines for leaks. Contact technician for service.
- Annual – Use thermometer to verify proper mixing valve operation.
- Annual – Flush DHW loop to remove scaling. Vinegar can be used to remove scaling.

WARNING

Follow boiler shut down procedure in the preceding Sections of this manual before cleaning.

- Periodic – Consult mixing valve manual for maintenance instructions.

XVII – Flat Plate Heat Exchanger Replacement

1. Unscrew control panel assembly from front and tilt back ensuring wire harness connections are removed to avoid damaging them. Unscrew top and bottom flat plate heat exchanger connections including bottom fasteners. Loosen "S" pipe attached to circulator to facilitate remove of flat plate.
2. Pull Flat Plate Heat Exchanger from boiler. Install new heat exchanger in reverse ensuring gaskets are installed. For replacement gaskets, see Section XV "Service Parts".
3. Connect Wire Harness and Re-Install Control Panel ensuring no wires are pinched between panel and front frame.

XVIII - Domestic Actuator Replacement

1. Switch power supplies OFF. Disconnect electrical leads, carefully noting the position and color of each lead.
2. Please the manual operating level in the manual open position.
3. Remove actuator by depressing locking button and lifting straight up.
4. To Install: Line up motor coupling to slot in shaft of body and fit the head onto the valve body, ensuring it seats correctly.
5. Snap actuator onto body by pressing down.
6. Wire connection to harness. Ensure actuator is set to AUTO mode.
7. Inspect the actuator installation and the valve body to ensure it is operating properly.

Appendix C: Special Requirements For Side-Wall Vented Appliances In The Commonwealth of Massachusetts

IMPORTANT

The Commonwealth of Massachusetts requires compliance with regulation 248 CMR 4.00 and 5.00 for installation of side-wall vented gas appliances as follows:

(a) For all side wall horizontally vented gas fueled equipment installed in every dwelling, building or structure used in whole or in part for residential purposes, including those owned or operated by the Commonwealth and where the side wall exhaust vent termination is less than seven (7) ft. above finished grade in the area of the venting, including but not limited to decks and porches, the following requirements shall be satisfied:

1. INSTALLATION OF CARBON MONOXIDE DETECTORS. At the time of installation of the side wall horizontal vented gas fueled equipment, the installing plumber or gas fitter shall observe that a hard wired carbon monoxide detector with an alarm and battery back-up is installed on the floor level where the gas equipment is to be installed. In addition, the installing plumber or gas fitter shall observe that a battery operated or hard wired carbon monoxide detector with an alarm is installed on each additional level of the dwelling, building or structure served by the side wall horizontal vented gas fueled equipment. It shall be the responsibility of the property owner to secure the services of qualified licensed professionals for the installation of hard wired carbon monoxide detectors.

a. In the event that the side wall horizontally vented gas fueled equipment is installed in a crawl space or an attic, the hard wired carbon monoxide detector with alarm and battery back-up may be installed on the next adjacent floor level.

b. In the event that the requirements of this subdivision can not be met at the time of completion of installation, the owner shall have a period of thirty (30) days to comply with the above requirements; provided, however, that during said thirty (30) day period, a battery operated carbon monoxide detector with an alarm shall be installed.

2. APPROVED CARBON MONOXIDE DETECTORS. Each carbon monoxide detector as required in accordance with the above provisions shall comply with NFPA 720 and be ANSI/UL 2034 listed and IAS certified.

3. SIGNAGE. A metal or plastic identification plate shall be permanently mounted to the exterior of the building at a minimum height of eight (8) ft. above grade directly in line with the exhaust vent terminal for the horizontally vented gas fueled heating appliance or equipment. The sign shall read, in print size no less than one-half (1/2) inch in size, “GAS VENT DIRECTLY BELOW. KEEP CLEAR OF ALL OBSTRUCTIONS”.

4. INSPECTION. The state or local gas inspector of the side wall horizontally vented gas fueled equipment shall not approve the installation unless, upon inspection, the inspector observes carbon monoxide detectors and signage installed in accordance with the provisions of 248 CMR 5.08(2)(a)1 through 4.

(b) EXEMPTIONS: The following equipment is exempt from 248 CMR 5.08(2)(a)1 through 4:

1. The equipment listed in Chapter 10 entitled “Equipment Not Required To Be Vented” in the most current edition of NFPA 54 as adopted by the Board; and

2. Product Approved side wall horizontally vented gas fueled equipment installed in a room or structure separate from the dwelling, building or structure used in whole or in part for residential purposes.

(c) MANUFACTURER REQUIREMENTS - GAS EQUIPMENT VENTING SYSTEM PROVIDED. When the manufacturer of Product Approved side wall horizontally vented gas equipment provides a venting system design or venting system components with the equipment, the instructions provided by the manufacturer for installation of the equipment and the venting system shall include:

1. Detailed instructions for the installation of the venting system design or the venting system components; and

2. A complete parts list for the venting system design or venting system.

(d) MANUFACTURER REQUIREMENTS - GAS EQUIPMENT VENTING SYSTEM NOT PROVIDED. When the manufacturer of a Product Approved side wall horizontally vented gas fueled equipment does not provide the parts for venting the flue gases, but identifies “special venting systems”, the following requirements shall be satisfied by the manufacturer:

1. The referenced “special venting system” instructions shall be included with the appliance or equipment installation instructions; and

2. The “special venting systems” shall be Product Approved by the Board, and the instructions for that system shall include a parts list and detailed installation instructions.

(e) A copy of all installation instructions for all Product Approved side wall horizontally vented gas fueled equipment, all venting instructions, all parts lists for venting instructions, and/or all venting design instructions shall remain with the appliance or equipment at the completion of the installation.

SERVICE RECORD

DATE	SERVICE PERFORMED

VELOCITY
BOILER WORKS